BECON™
HVAC Solution
0CAA0-02A

LG TOTAL HVAC SOLUTION PROVIDER

ENGINEERING PRODUCT DATA BOOK

LG
Life's Good

P/No.: MFL61741641

BECON™ HVAC Solution

1. General Information
2. Individual Controller
3. Central Controller
4. Application Controller

BECON™ HVAC Solution

1. General Information

1.1 Solution Overview

1.2 Control System List

1.1 Solution Overview

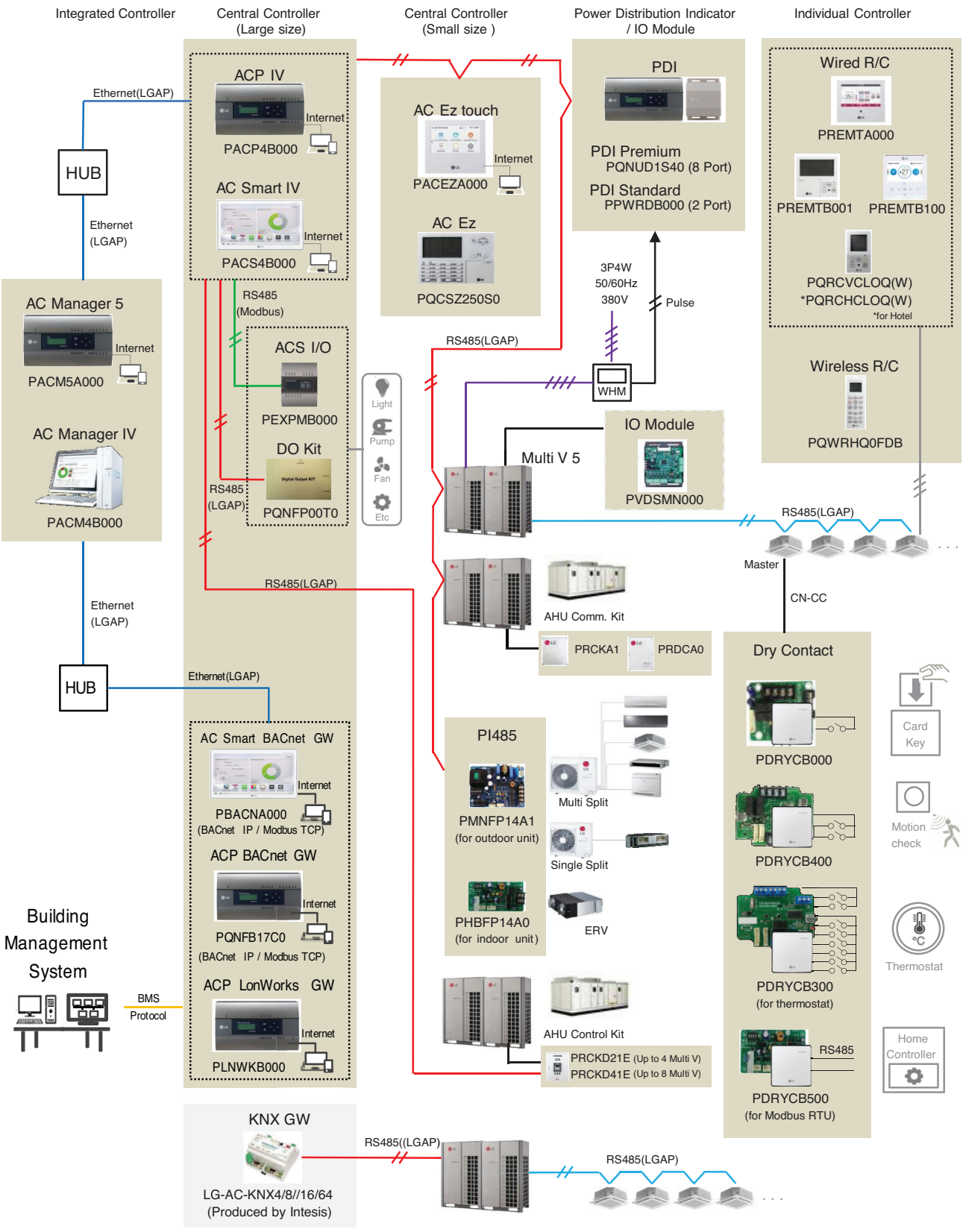

※ If you need more details, please refer to the Control PDB or the manual of its product.
(http://partner.lge.com/global : Home > Download > Manuals)

1.2 Control System List

Category	Controller name	Model name	Compatible Product	Dimensions (W x H x D, mm)	Feature
Individual controller	Premium Wired Remote Controller	PREMTA000(A/B) 	All IDU ERV 1) ERV DX	137 x 121 x 16.5	• 5 inch color Display • Touch Screen • Group control (Max 16 indoor unit) • Temp./Humid sensing
	Standard Wired Remote Controller	PREMTB100 PREMTBB10 	All IDU ERV 1) ERV DX	120 x 120 x 16	• 4.3 inch color Display • Touch button • Group control (Max 16 indoor unit) • Temp./Humid sensing (will be applied from Mar. 2017) • 1 Digital Output available(on/off)
		PREMTB001 PREMTBB01 	All IDU ERV 1) ERV DX	120 x 120 x 16	• 4.3 inch mono Display • Hard button • Group control (Max 16 indoor unit) • 2 remote controller control • Temp. sensing • Basic / Advanced function* • schedule function
	Simple Wired Remote Controller	PQRCVCL0Q(W) 	All IDU	120 x 64 x 15	• 2.6 inch mono Display • Hard button • Group control (Max 16 indoor unit) • 2 remote controller control • Temp. sensing • Basic function*
		PQRCHCA0Q(W) 	All IDU	120 x 64 x 15	• 2.6 inch mono Display • Hard button • Group control (Max 16 indoor unit) • 2 remote controller control • Temp. sensing • Basic function* (except mode change)
	Wireless Remote Controller	PQWRHQ0FDB 	All IDU	153 x 51 x 26	• Heat Pump • 2 inch mono Display • Hard button • Temp. sensing • Basic function*
		PQWRCQ0FDB 	All IDU	153 x 51 x 26	• Cooling Only • 2 inch mono Display • Hard button • Temp. sensing • Basic function*

- 1) ERV : Energy Recovery Ventilation
- * Basic/Advanced function refer [Function List /Individual Controller].
- If you need more detail, please refer to the manual of product.
  (http://partner.lge.com/global : Home> Download> Manuals)

1.2 Control System List

Outline of system

1. Installation Method

12 V	Red
Signal	Yellow
GND	Black

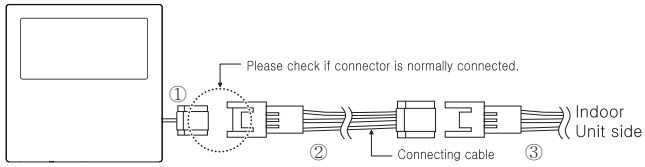

※ ① : AWG#24 / ②, ③ : AWG#22

⇒ The total cable length must not exceed 50m. (It can cause communication error.)

2. Group Control

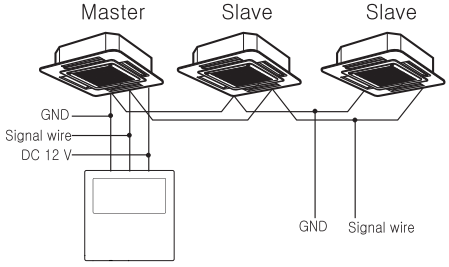

⇒ When controlling multiple indoor units with one remote controller, you must change the master/slave setting from the indoor unit.

3. 2 Remote Controller Control

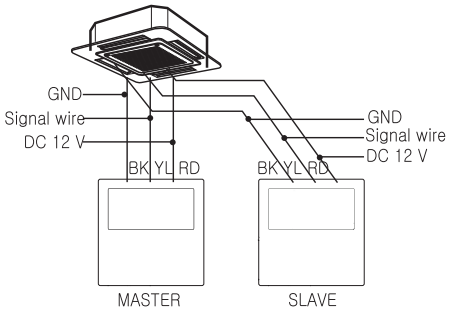

⇒ When installing more than 2 units of wired remote controller to one air conditioner, set one wired remote controller as master and the others all as slaves.

- **2 Remote Controller Control cable**
  - Model name : PZCWRC2
  - Length : 0.25m

Cable : 10EA

- **Extension cable**
  - Model name : PZCWRC1
  - Length : 9.6m

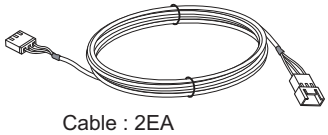

Cable : 2EA

- **Group Control cable**
  - Model name : PZCWRCG3
  - Length : 0.25m

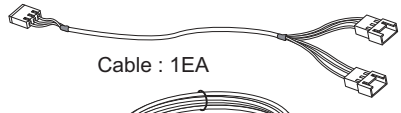

Cable : 1EA

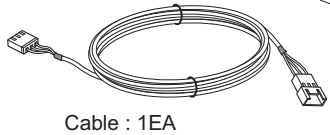

Cable : 1EA

- If you need more detail, please refer to the manual of product.
  (http://partner.lge.com/global : Home> Download> Manuals)

1.2 Control System List

Category	Controller name	Model name	Compatible Product	Dimensions (W x H x D, mm)	Feature
Central controller	AC Manager 5	PACM5A000 	All IDU ERV 1) ERV DX Hydro Kit AHU Chiller*	270 x 155 x 65	• PC Access Controller • 12 V⎓ Adaptor • Max 8,192 indoor unit control (Supports 32 ACP IV or AC Smart IV) • 1,260 I/O Point Control • Chrome(Recommended), Safari, Internet Explorer 11 support
	AC Manager IV	PACM4B000 	All IDU ERV 1) ERV DX Hydro Kit AHU Chiller*	-	• PC installation SW • Max 8,192 indoor unit control (Supports 32 ACP IV or AC Smart IV) • 1,260 I/O Point Control • Windows XP/7/8/8.1/10 OS support
	ACP IV	PACP4B000 	All IDU ERV 1) ERV DX Hydro Kit AHU Chiller*	270 x 155 x 65	• PC Access Controller • 12 V⎓ Adaptor • Max 256 indoor unit control • RS485 : 6 channels CH1~4 : indoor unit 2) CH5 : LGAP(AHU) or Modbus(AHU, Chiller, ACS I/O) CH6 : Modbus(AHU, Chiller, ACS I/O) • DI 10EA, DO 4EA (DI1 : Emergency stop Only)
	ACP BACnet	PQNFB17C0 	All IDU ERV 1) ERV DX Hydro Kit AHU	270 x 155 x 65	• PC Access Controller • Max 256 indoor unit control • 12 V⎓ Adaptor • RS485 : 6 channels CH1~4 : indoor unit 2) CH5 : LGAP(AHU) CH6 : Not use • DI 10EA, DO 4EA (DI1 : Emergency stop Only) • BACnet IP Protocol Support • Modbus TCP Protocol Support • BTL Certified(B-ASC)
	ACP Lonworks	PLNWKB000 	All IDU ERV 1) ERV DX Hydro Kit AHU	270 x 155 x 65	• PC Access Controller • Max 64 indoor unit control • 12 V⎓ Adaptor • RS485 : 6 channels Lon Comm. : 1 channel CH1~4 : indoor unit 2) CH5 : LGAP(AHU) CH6 : Not use LON : Lon Talk • Lonworks Protocol Support

- 1) ERV : Energy Recovery Ventilation
- 2) Indoor unit : IDU, ERV, DX ERV, Hydro Kit, DO Kit
- * It needs to apply Chiller Option KIT.
- If you need more detail, please refer to the manual of product. (http://partner.lge.com/global : Home> Download> Manuals)

1.2 Control System List

Outline of system

▶ When using a HUB, use Direct UTP Cable.

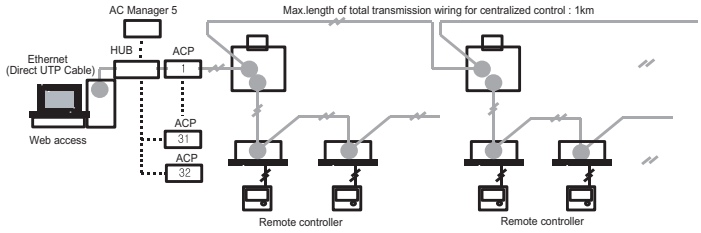

▶ When using a HUB, use Direct UTP Cable.

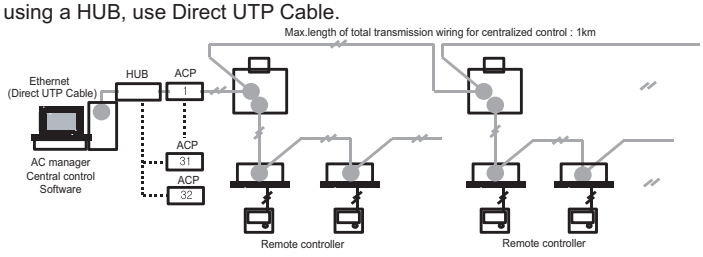

- Recommended PC Specifications for AC Manager IV
  - CPU : Dual Core 2.4GHz or faster
  - System Memory: 4 GB or more
  - Hard Disk Space : 100 GB or more
  - OS : Windows XP/7/8/8.1/10
  - Resolution : 1280 x 1024 or higher
  - Recommended Graphics:
    VGA: For NVidia, Geforce or later.
    For ATI, Radeon or later
  - ACP : ACP version 1.1.4p or higher

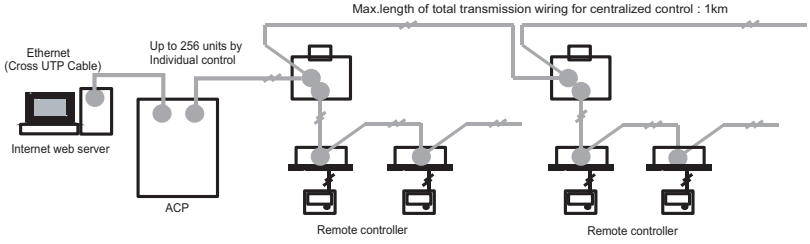

- Max. the number of connected node* in one RS485 Line : 32
- Communication cable
  - Types : shielding wire
  - Use wires of size : over 0.75 ~ 1.5 mm^2
  - Max. allowable temperature of cable : 60℃
  - Max. length of total transmission wiring (End to End) : 1 km

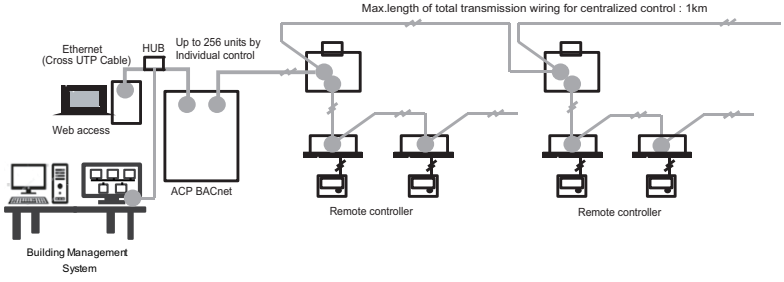

- Max. the number of connected node* in one RS485 Line : 32
- Communication cable
  - Types : shielding wire
  - Use wires of size : over 0.75 ~ 1.5 mm^2
  - Max. allowable temperature of cable : 60℃
  - Max. length of total transmission wiring (End to End) : 1 km

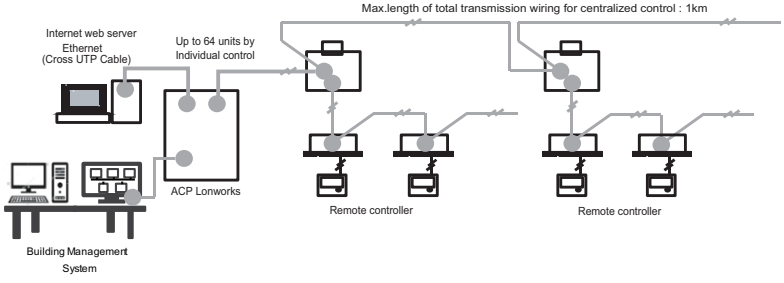

- Max. the number of connected node* in one RS485 Line : 32
- Communication cable
  - Types : shielding wire
  - Use wires of size : over 0.75 ~ 1.5 mm^2
  - Max. allowable temperature of cable : 60℃
  - Max. length of total transmission wiring (End to End) : 1 km

- * nodes : Central controller + (Multi V outdoor unit x 2) + Other PI 485 G/W ≤ 32 ea
  Ex) ACP 1ea + AC Smart Premium 2 ea + Multi V outdoor unit 6ea = 1 + 2 + (6 x 2) = 15 nodes
- If you need more detail, please refer to the manual of product.
  (http://partner.lge.com/global : Home> Download> Manuals)

1.2 Control System List

Category	Controller name	Model name	Compatible Product	Dimensions (W x H x D, mm)	Feature
Central controller	AC Smart IV AC Smart BACnet	PACS4B000 PBACNA000 	All IDU ERV 1) ERV DX Hydro Kit AHU Chiller*	253.2 x 167.7 x 28.9	• 10.2 inch color Display • Touch Screen • 12 V ⎓ Adaptor • Max 128 indoor unit control • RS485 : 2 channels CH1 : LGAP(AHU) or Modbus(AHU, Chiller, ACS I/O) CH2 : Indoor unit 2) • DI 2EA, DO 2EA
	AC Ez Touch	PACEZA000 	All IDU ERV 1) ERV DX Hydro Kit	137x 121 x 25	• 5inch color Display • Touch Screen • 12 V ⎓ Adaptor • Max 64 indoor unit control • RS485 : 1 channel • DI 1EA (Emergency stop Only)
	AC Ez	PQCSZ250S0 	All IDU ERV 1) ERV DX	190 x 120 x 20	• TN Mono Display & 18 LED • Button Control • 12 V ⎓ • Max 32 indoor unit control • RS485 : 1 channel
	PDI Premium	PQNUD1S40 	All IDU ERV DX Hydro Kit	[Controller] 270 x 155 x 65 [Power Module] 120 x 155 x 65	• EHP ODU 8EA (GHP 4EA) • 128 EHP Indoor Units (64 GHP Indoor Units) • 220-240 V~ Power Input • 8port Pulse Input
	PDI Standard	PPWRDB000 	All IDU ERV DX Hydro Kit	[Controller] 270 x 155 x 65 [Power Module] 120 x 155 x 65	• EHP ODU 2EA (GHP 1EA) • 128 EHP Indoor Units (64 GHP Indoor Units) • 220-240 V~ Power Input • 2port Pulse Input
Interface Device	ACS I/O Module	PEXPMB000 	ACP IV AC Smart IV	126 x 155 x 65	• 24 V~ Power Input • AO 4EA (Voltage) • UI 4EA (Voltage, Current, NTC 10k, PT1000, Ni1000, Dry Contact) • DI 3EA (Dry Contact) • DO 3EA (Relay Output / Normal Open) • RS485 : 1 channel(Modbus)

- * It needs to apply Chiller Option KIT.
- 1) ERV : Energy recovery ventilation
- 2) Indoor unit : IDU, ERV, DX ERV, Hydro Kit, DO Kit
- If you need more detail, please refer to the manual of product.
  (http://partner.lge.com/global : Home> Download> Manuals)

1.2 Control System List

Outline of system

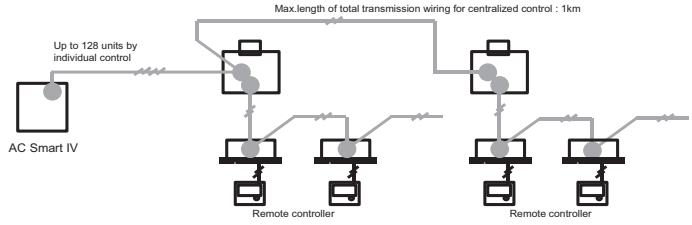

- Communication cable
  - Types : shielding wire
  - Use wires of size : over 0.75 ~ 1.5 mm^2
  - Max. allowable temperature of cable : 60℃
  - Max. length of total transmission wiring (End to End) : 1 km

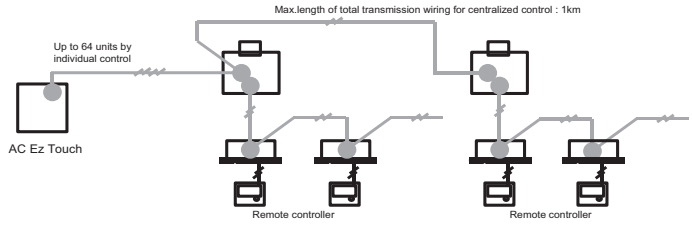

- Communication cable
  - Types : shielding wire
  - Use wires of size : over 0.75 ~ 1.5 mm^2
  - Max. allowable temperature of cable : 60℃
  - Max. length of total transmission wiring (End to End) : 1 km

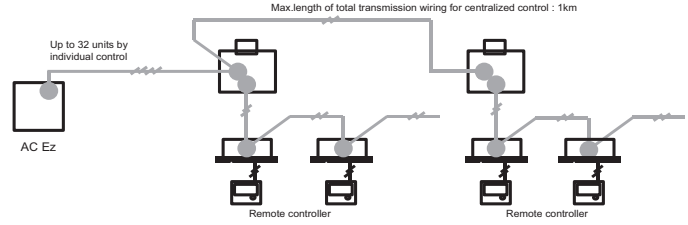

- Communication cable
  - Types : shielding wire
  - Use wires of size : over 0.75 ~ 1.5 mm^2
  - Max. allowable temperature of cable : 60℃
  - Max. length of total transmission wiring (End to End) : 1 km

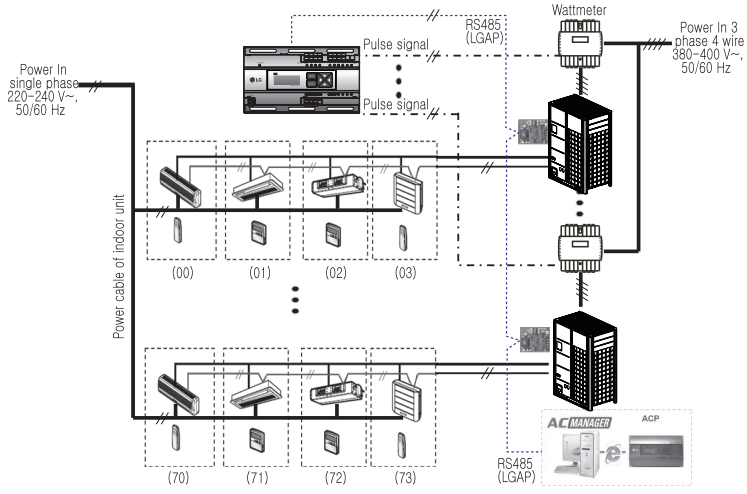

- Communication cable
  - Types : shielding wire
  - Use wires of size : over 0.75 ~ 1.5 mm^2
  - Max. allowable temperature of cable : 60℃
  - Max. length of total transmission wiring (End to End) : 1 km
- Pulse cable
  - Types : shielding wire
  - Use wires of size : over 0.75 ~ 1.5 mm^2
  - Max. allowable temperature of cable : 60℃
  - Max. length of total transmission wiring (End to End) : 10 m

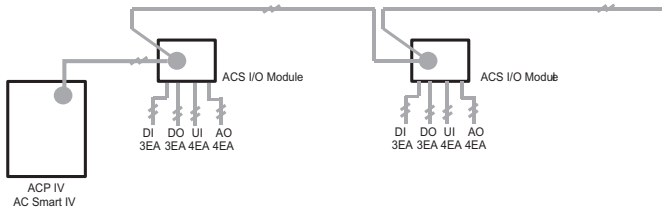

- ACP IV : Up to 16 ACS I/O Modules*
- AC Smart IV : Up to 9 ACS I/O Modules*
- Communication cable
  - Types : shielding wire
  - Use wires of size : over 0.75 ~ 1.5 mm^2
  - Max. allowable temperature : 60°C
  - Max. length of total transmission wiring for centralized control : 1km
  - Max. length of I/O wiring : 100m

- * The maximum quantity of connected indoor unit is different depending on the quantity of connected I/O modules
- If you need more detail, please refer to the manual of product. (http://partner.lge.com/global : Home> Download> Manuals)

1.2 Control System List

Category	Controller name	Model name	Objective /Use	Dimensions (W x H x D, mm)	Feature
Interface Device	Dry Contract	PDRYCB000 PDRYCB100 	For Connect indoor unit to other forced on/off controller	120 x 120 x 36.5	• 1SET / 1 IDU • 1 Contact point • Input power 220-240 V~ – PDRYCB000 : 220-240 V~ – PDRYCB100 : 24 V~ • 2 output contacts(operation, error)
		PDRYCB300 	For Connect Indoor unit to Other Thermostat Controller. (Available from Multi V 2 series)	120 x 120 x 36.5	• 1SET / 1 IDU • 8 Contact point • No need AC input • Target temperature setting is possible • 2 output contacts(operation, error)
		PDRYCB400 	For Connect Indoor unit to other Forced on/off Controller. (Available from Multi V 2 series)	120 x 120 x 36.5	• 1SET / 1 IDU • 2 Contact point • No need AC input • Target temperature setting is possible • 2 output contacts(operation, error)
		PDRYCB500 	For Connect Indoor unit to external controller. (Available from Multi V 2 series)	120 x 120 x 36.5	• 1SET / 1 IDU • 2 wire RS485 • MODBUS • Address range (01~08) - After 2018 (01~16) • 2 output contacts(operation, error)
	Remote Temperature Sensor	PQRSTA0 	Sensor for detecting the room temperature	70 x 120 x 14.8	• 1SET / 1 IDU • 2 output contacts(operation, error)

- If you need more detail, please refer to the Control PDB or the manual of product. (http://partner.lge.com/global : Home> Download> Manuals)

1.2 Control System List

Outline of system

Connect CN-CC with Indoor PCB by the cable(provided)
- Connection of Dry contact only

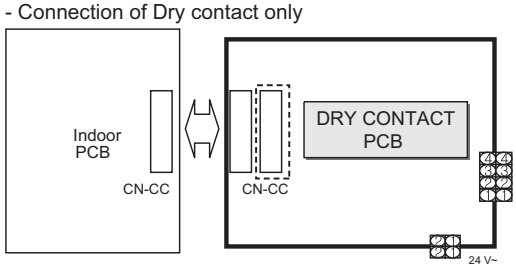

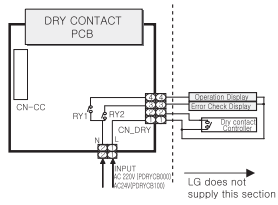

To Apply Power Source through PCB

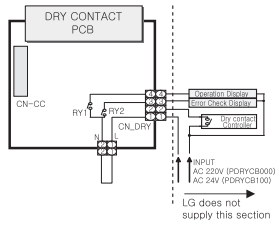

To Apply Power Source Directly to External Source

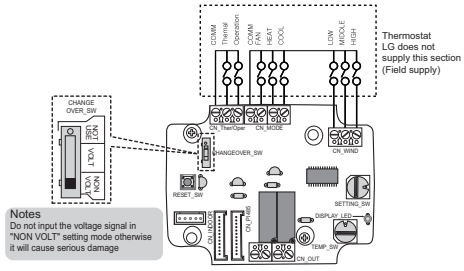

For no Power Contact Point signal Input

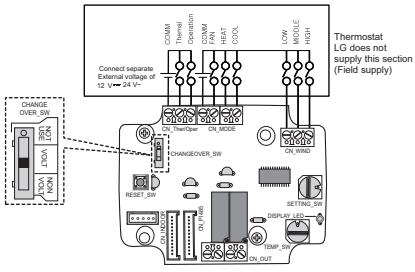

For Power Contact Point signal Input

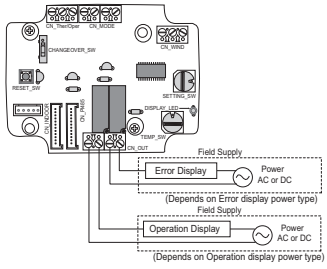

Indoor Unit Monitoring

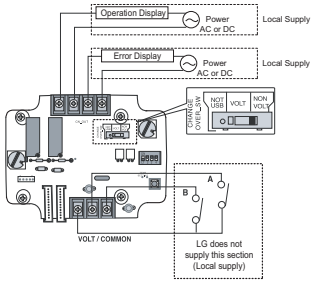

In Case Non Voltage Signal

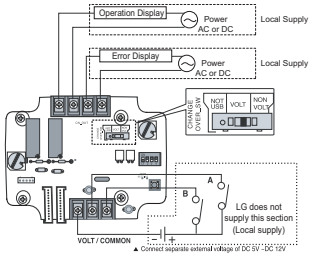

In Case Voltage Signal

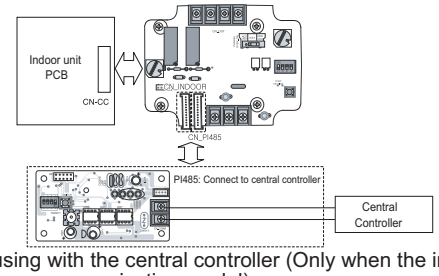

▶When using with the central controller (Only when the indoor unit PCB is a non-communication model)

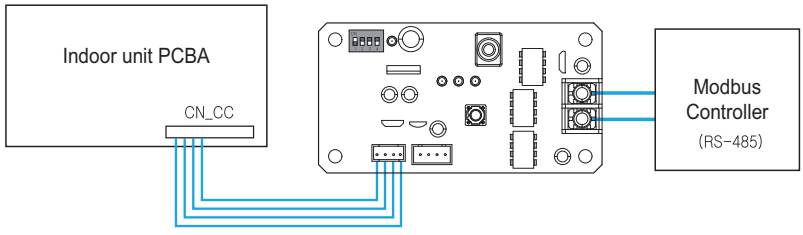

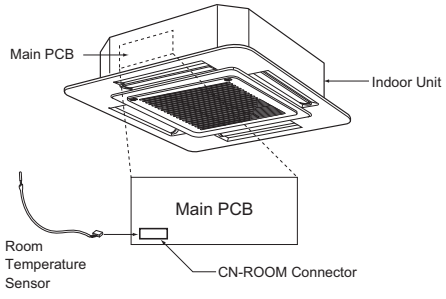

⚠ CAUTION

Remote temperature sensor only applied to Cassette and Duct products.

- If you need more detail, please refer to the manual of product. (http://partner.lge.com/global : Home> Download> Manuals)

1.2 Control System List

Category	Controller name	Model name	Objective /Use	Dimensions (W x H x D, mm)	Feature
Interface Device	Cool/Heat Selector	PRDSBM 	To Select Operation Mode	74 x 120 x103	• Push Button Type • Mode : Cooling, Heating, Fan
	IO(Input/Output) Module	PVDSMN000 	Expansion IO function (Available from Multi V 4 series)	126 x 155 x 33	• AO 4EA(0~10V) • AI 2EA(0~10V) • DI 8EA(Dry Contact) • DO 4EA(Relay / Normal Open)
	Variable Water Flow Valve Control Kit [1)]	PWFCKN000 	Variable Water Flow Valve (Available from Multi V Water 4 series)	218 x 200 x 85	• AO 2EA (Voltage) • AI 2EA (Voltage) • DI 6EA (DryContact) • DO 2EA (operation, error) Relay Output / Normal Open
	Low Ambient Control Kit	PRVC2 	Low Ambient (Available from Multi V 4 series)	126 x 155 x 33	• AO 2EA (Voltage) • AI 2EA (Voltage) • DI 6EA (DryContact) • DO 2EA (operation, error) Relay Output / Normal Open

- 1) It is available Multi V Water Outdoor unit only.
- If you need more detail, please refer to the manual of product. (http://partner.lge.com/global : Home> Download> Manuals)

1.2 Control System List

Outline of system

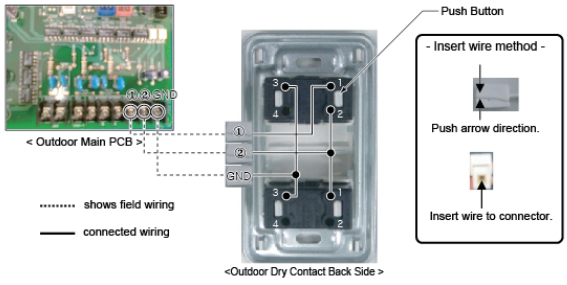

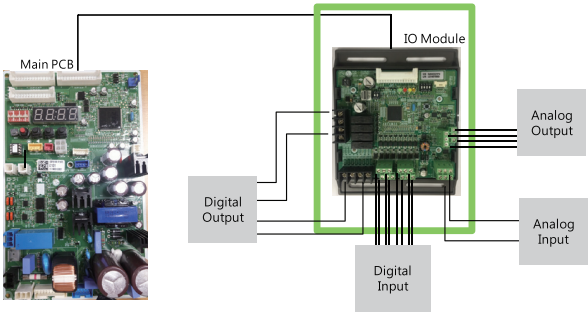

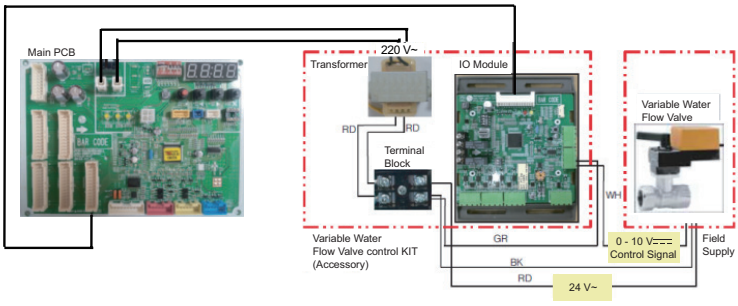

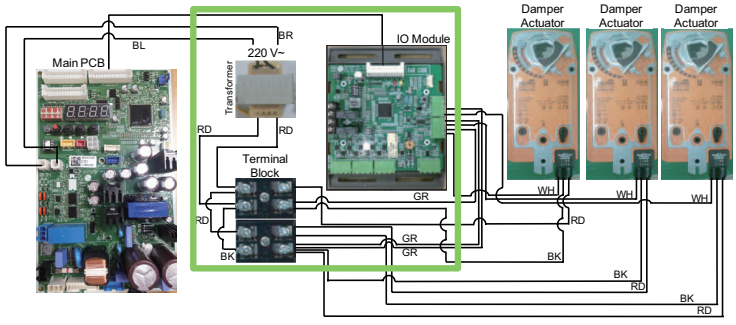

- If you need more detail, please refer to the Control PDB or the manual of product. (http://partner.lge.com/global : Home> Download> Manuals)

1.2 Control System List

Category	Controller name	Model name	Objective /Use	Dimensions (W x H x D, mm)	Feature
Interface Device	AHU Comm. Kit	PAHCMR000  <Product cover>  <Communication Module>	Return Air Temperature Control	300 X 300 X 155	• UI 4EA (AI/DI) • DO 3EA (Relay, A type) • T/B Spring Push Type
	AHU Comm. Kit	PAHCMS000 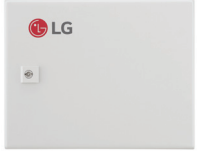 <Product cover>  <Main Module(left) and Communication Module(right)>	Discharge Air Temperature Control	380 X 300 X 155	• UI 15EA (AI/DI) • DI 3EA (Dry Contact) • DO 9EA (Relay, A type 8EA, C type 1EA) • AO 6EA (0~10V) • T/B Spring Push Type

- If you need more detail, please refer to the manual of product. (http://partner.lge.com/global : Home> Download> Manuals)

1.2 Control System List

Return Air Temperature Control

• LG Control : Fixed T_e + T_r or T_{Room}

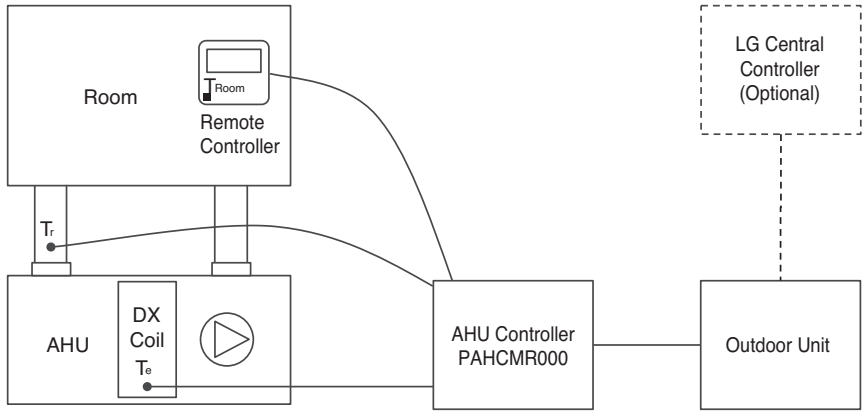

A fixed evaporating or condensing temperature of a DX coil (T_e) can be controlled by either return air temperature (T_r) or room air temperature (T_{Room}). A fixed target evaporating or condensing temperature can be changed in MULTI V and Single outdoor unit setting.

• DDC Control by Contact Signal : Fixed T_e + T_r or T_{Room}

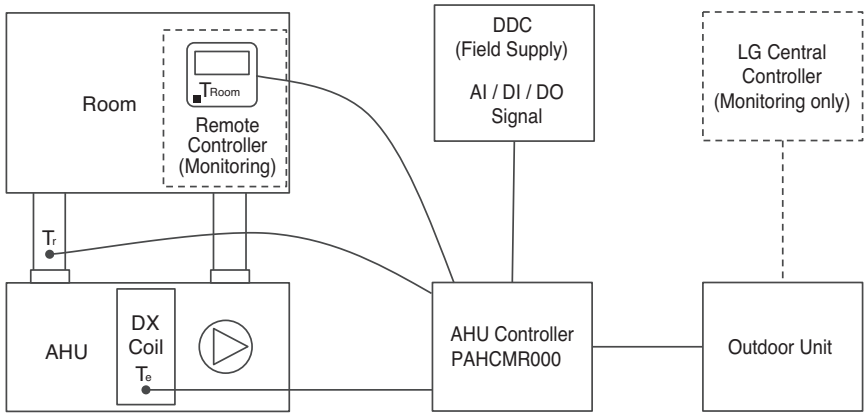

The DDC controls return air temperature (T_r) or room air temperature (T_{Room}) by transferring AI / DI / DO signal to the AHU Communication Kit for Return air control. A fixed target evaporator or condensing temperature (T_e) can be changed in MULTI V and Single outdoor setting. LG wired remote controller and LG Central Controller can be optionally applied, but only monitoring function is possible.

1.2 Control System List

Return Air Temperature Control	**• DDC Control by Modbus : Fixed T_e + T_r or T_{Room}**

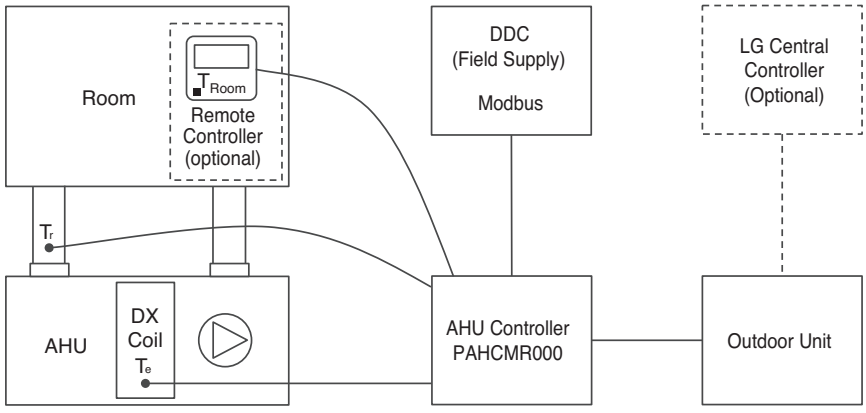

The DDC controls return air temperature (T_r) or room air temperature (T_{Room}) by transferring Modbus signal to the AHU Communication Kit for Return air control. To control room air, the LG wired controller can be purchased optionally. A fixed target evaporator or condensing temperature (T_e) can be changed in MULTI V and Single outdoor setting.

Discharge Air Temperature Control	**• LG Control : Variable T_e + T_d**

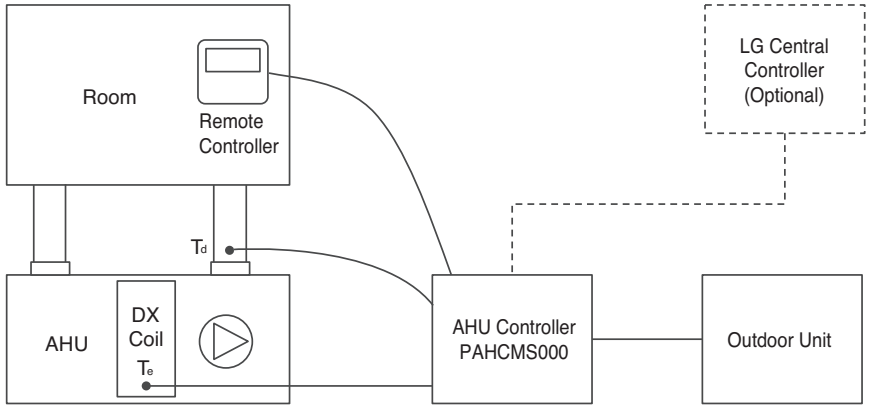

The Communication Kit for Discharge Air Temperature Control is single-handed able to cover this function. The Communication Kit adjusts the evaporating or condensing temperature (T_e) by monitoring the supplied air temperature (T_d) in order to meet the required set target (T_d).

1.2 Control System List

Discharge Air Temperature Control

• DDC Control by Contact Signal : Variable T_e + T_d (0~10 V)

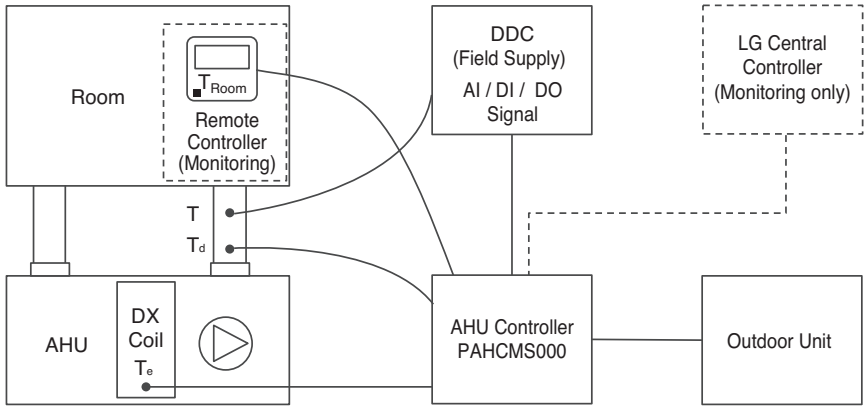

The DDC controls the discharge air temperature by sending an analog input (0 to 10V) to the AHU Communication Kit for Discharge Air Control which will adjust the targets (T_e) to which the outdoor unit is running hence increasing or decreasing the discharge air temperatures.

• DDC Control by Modbus : Variable T_e + T_d

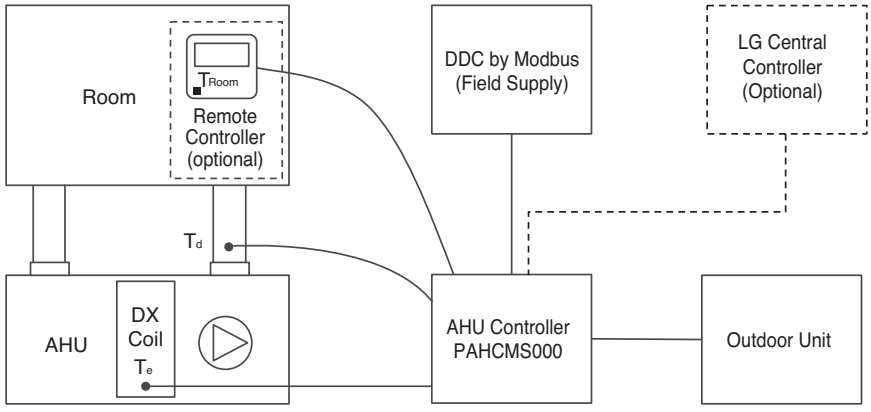

The DDC controls the discharge air temperature (T_d) by sending modbus signal to the AHU Communication Kit which will vary the targets (T_e) to which the outdoor unit is running hence increasing or decreasing temperatures.

1.2 Control System List

Category	Controller name	Model name	Objective /Use	Dimensions (W x H x D, mm)	Feature
Maintenance Accessory	LGMV	PRCTIL0 	LGMV data monitoring via Personal Computer	105 x 78 x 36	• Length of cable : 1m (3m extension cable is included) • RS232(ODU), RS485(IDU) support • USB type of connection are possible.

Category	Connected device	Installation Method	Feature
Maintenance Accessory	PC Program 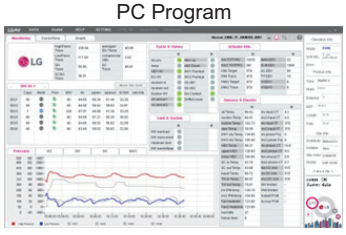 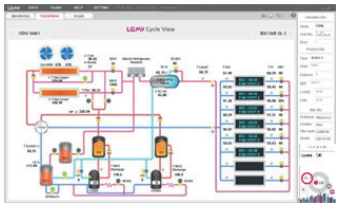	• Web Install – Connect to homepage (http://partner.lge.com) and select HVAC category then downloaded installation file on software menu. • Automatic Install – The accessory application program supports for automatic updates. • CD Install – It can be installed on from CD.	• Minimum Specification – Windows XP – MS Office 2003 • Recommended Specification – Windows7 (Win10 is possible) – MS Office 2007 • Resolution – 2048 x 1536 (optimization) – 1024 x 768 • Basic specification – CPU 1 GHz – RAM 1 GB

- If you need more detail, please refer to the manual of product. (http://partner.lge.com/global : Home> Download> Manuals)

1.2 Control System List

Outline of system

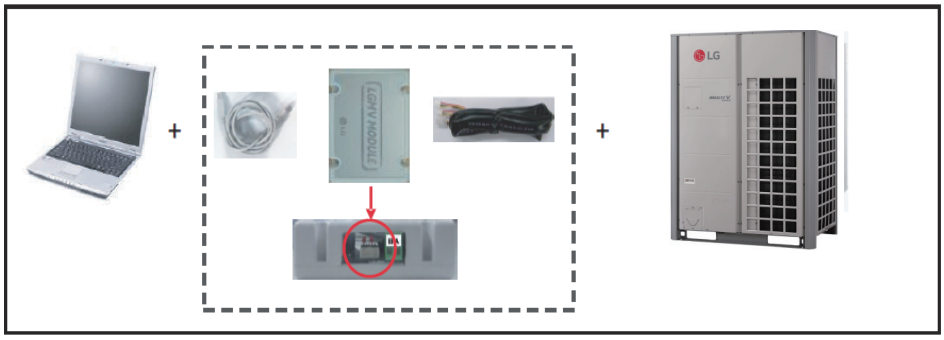

1. Outdoor connection

Connect LGMV cable to Multi V PCB LGMV port

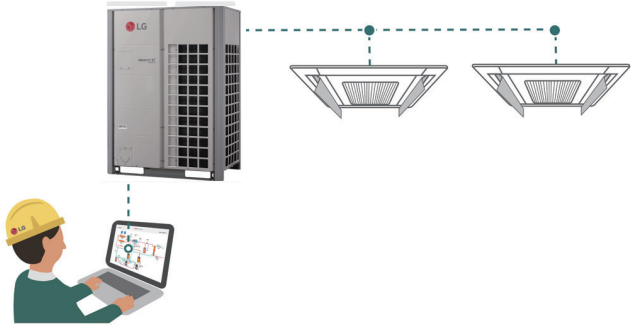

2. Indoor unit connection

Connect LGMV cable to Multi V Indoor unit communication port

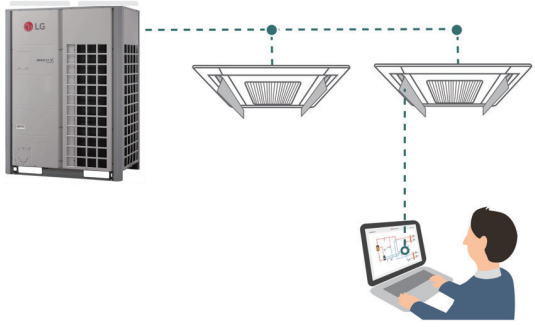

- If you need more detail, please refer to the manual of product.
  (http://partner.lge.com/global : Home> Download> Manuals)

1.2 Control System List

Category	Controller name	Model name	Objective /Use	Dimensions (W x H x D, mm)	Feature
Maintenance Accessory	Mobile LGMV	PLGMVW100 	LGMV monitoring via mobile device	48 x 78 x 14.5	• The effective distance for wireless communication is 10m • The effective distance may be reduced by the communication environment.

Category	Connected device	Installation Method	Feature
Maintenance Accessory	iOS App. (iPad only) 	Tap the app Store icon on the screen. And then Search 'mobile lgmv'	• Minimum Specification – iOS 7.1 • Recommended Specification – iOS 7.1/8.0/8.1 • Resolution – 2048 x 1536 (optimization) – 1024 x 768
	Android mobile phone App. 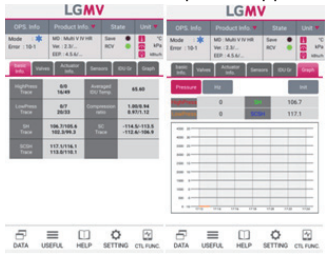	Tap the Play Store icon on the screen. And then Search 'mobile lgmv'	• Basic specification – Phone: Android OS 2.2 – Pad: Android 4.4.2(Kitkat) – CPU 1 GHz – RAM 1 GB • Recommended Specification – Android OS 4.4.2(Kitkat) or higher, CPU 1 GHz Dual Core or higher, RAM 1 GB or higher 1280 x 720, 800 x 480 resolution (Optimized)

- If you need more detail, please refer to the manual of product.
  (http://partner.lge.com/global : Home> Download> Manuals)

1.2 Control System List

Outline of system

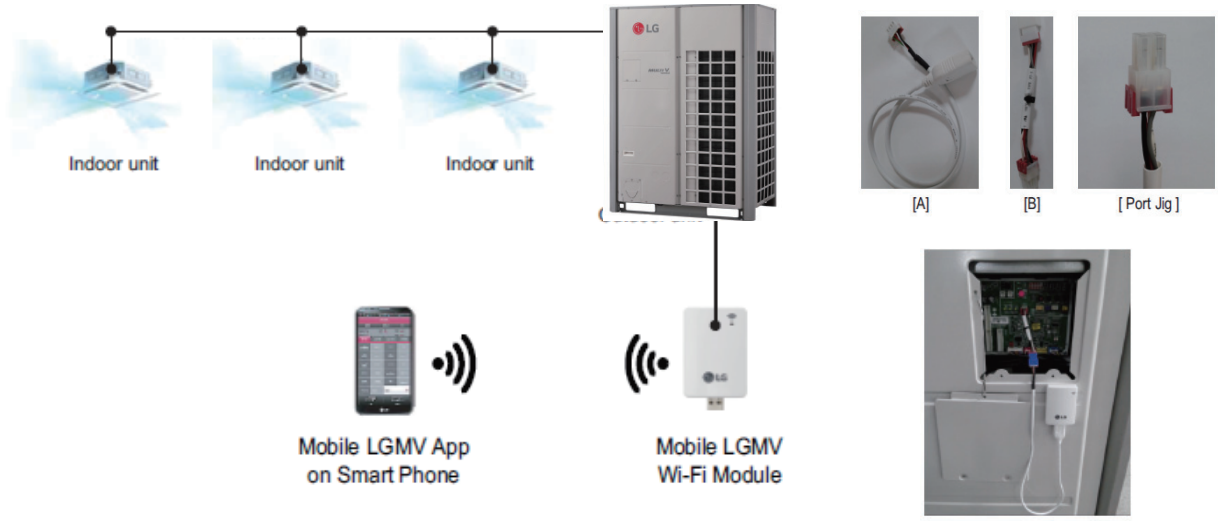

- If you need more detail, please refer to the manual of product.
  (http://partner.lge.com/global : Home> Download> Manuals)

2. Individual Controller

2.1 List of Function

2.2 Installation

2.3 Specifications

2.4 Compatibility Table

2.1 List of Function

Controller Name		Premium Wired Remote Controller	Standard Wired Remote Controller		Simple Wired Remote Controller	Simple(Hotel) Wired Remote Controller	Wireless Remote Controller
Product Image							
Model Name		PREMTA000 PREMTA000A PREMTA000B	PREMTB100 PREMTBB10	PREMTB001 PREMTBB01	PQRCVCL0Q PQRCVCL0QW	PQRCHCA0Q PQRCHCA0QW	PQWRHQ0FDB PQWRCQ0FDB
Basic	On / Off	O	O	O	O	O	O
	Fan Speed Control	O	O	O	O	O	O
	Temperature Setting	O	O	O	O	O	O
	Mode Change	O	O	O	O	X	O
	Auto Swing	O	O	O	O	O	O
	Vane Control (Louver Angle)	O	O	O	O	O	O
	E.S.P (External Static Pressure)	O	O	O	O	O	X
	Electric Failure Compensation	O	O	O	O	O	X
	Indoor Temperature Display	O	O	O	O	O	O
	ALL Button Lock (Child Lock)	O	O	O	O	O	X
Advanced	Schedule / Timer	O	O	O	X	X	O
	Additional Mode Setting*	O	O	O	X	X	X
	Time Display	O	O	O	X	X	O
	humid. Display	O	O	X	X	X	X
	Advanced Lock (mode, set point, set point range, on/off Lock)	Advanced Lock	Advanced Lock	Mode Lock	X	X	X
	Filter Sign	O	O	O	X	X	X
	EnergyManagement **	O	O	O	X	X	X
	Dual Set point	O	O	X	X	X	X
ETC	Operation StatusLED	O	O	O	O	O	X
	Wireless Remote Controller Receiver	O***	X	O***	O***	O***	X
	Display	5 inch Color Display	4.3 inch Color Display	4.3 inch mono Display	2.6 inch mono Display	2.6 inch mono Display	2 inch mono Display
	Size (W x H x D, mm)	137 x 121 x 16.5	120 x 120 x 16	120 x 120 x 15	64 x 120 x 15	64 x 120 x 15	51 x 153 x 26
	Black Light Control for Screen Saver	O	O	X	X	X	X

- O : Applied X : Not applied
- * It might not be indicated or operated at the partial product
- ** Centralized control (PACS4B000 / PACP4B000 / PQNFB17C0 / PLNWKB000) and PDI (PQNUD1S40 / PPWRDB000) should be installed for this function
- *** For ceiling type duct
- Indoor unit should have functions requested by the controller
- If you need more detail, please refer to the manual of product. (http://partner.lge.com/global : Home> Download> Manuals)

2.2 Installation

2.2.1 1:1 connection

Installation step PQRCVSL0 / PQRCVSL0QW / PQRCVCL0Q / PQRCVCL0QW / PQRCHCA0Q / PQRCHCA0QW

1. Please fix tightly using provided screw after placing remote controller setup board on the place where you like to setup.

- Please set it up not to bend because poor setup could take place if setup board bends.
  Please set up remote controller board fit to the reclamation box if there is a reclamation box.

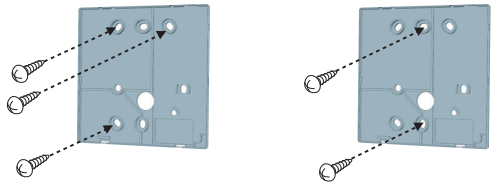

2. Can set up Wired remote controller cable into three directions.

- Setup direction: the surface of wall reclamation, upper, right
- If setting up remote controller cable into upper and right side, please set up after removing remote controller cable guide groove.

❊ Remove guide groove with long nose.
① Reclamation to the surface of the wall
② Upper direction guide groove
③ Right part guide groove

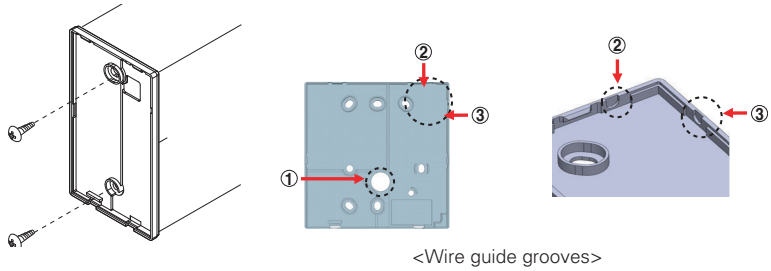

<Wire guide grooves>

3. Please fix remote controller upper part into the setup board attached to the surface of the wall, as the picture below, and then, connect with setup board by pressing lower part.

- Please connect not to make a gap at the remote controller and setup board's upper and lower, right and left part.

<Connecting order>

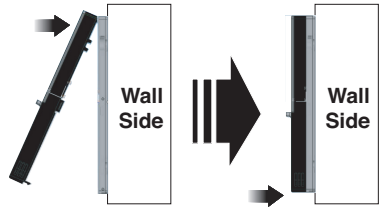

When separating remote controller from setup board, as the picture below, after inserting into the lower separating hole using screw driver and then, spinning clockwise, remote controller is separated.

- There are two separating holes. Please individually separate one at a time.
- Please be careful not to damage the inside components when separating.

<Separating order>

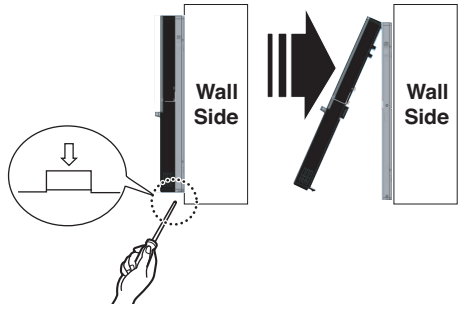

4. Please connect indoor unit and remote controller using connection cable.

12V	Red
Signal	Yellow
GND	Black

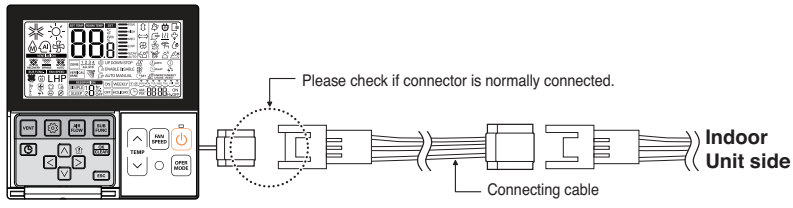

2.2 Installation

2.2.2 Group connection

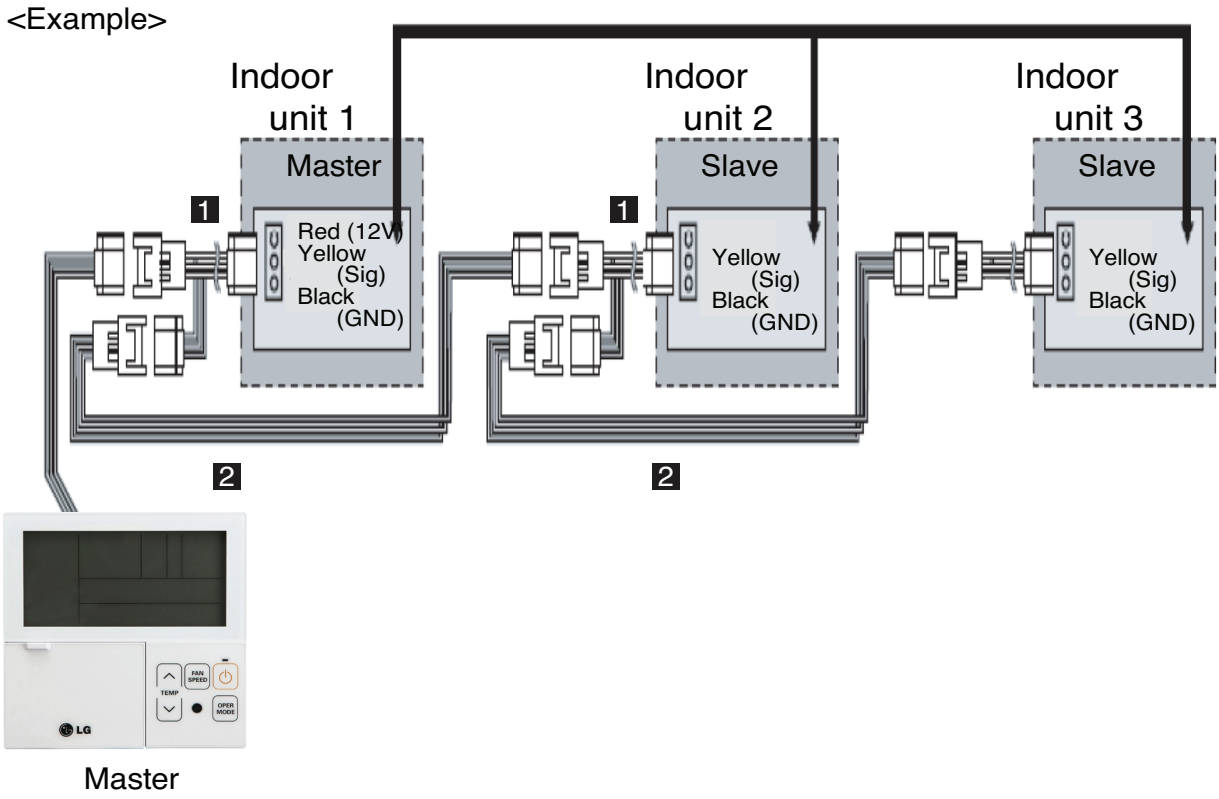

1. Max. 16 Indoor units by one remote controller.
2. Only one indoor unit to Master and others to Slave.
3. Except basic function(On/Off, Operation mode, Set temp., Fan speed) and reservation function, some of other functions may not be possible.
4. In case of using Central controller, the Central controller can control indoor units which has the address of master indoor unit. (Slave indoor unit can not be individually controlled by Central controller)
5. Dry contact can be allowed only in master indoor unit.
6. It is possible to use wireless remote controller at the same time.
7. In case that the group's indoor unit has an abnormal problem, an error code will be displayed on the wired remote controller.

2.2.3 2-Remote controller connection

■ Wired remote controller 2 + Indoor unit 1

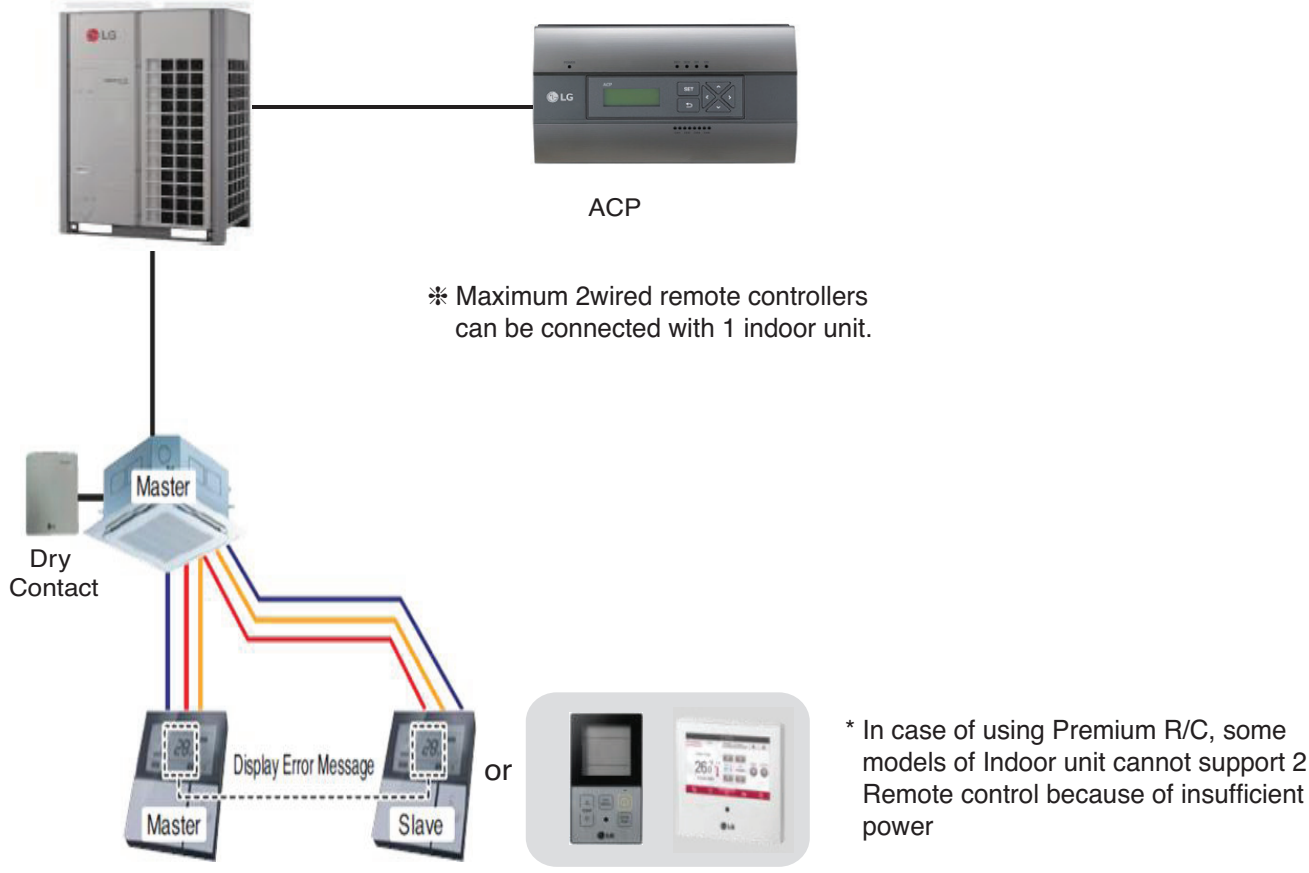

1. It is possible to connect two wired remote controllers with one indoor unit.
   - Set one indoor unit to Master and other one to Slave.
2. It is possible to use wireless remote controller at the same time.
3. It is possible to connect with Dry Contact and Central controller at the same time.
4. In case that the indoor unit has an abnormal problem an error code will be displayed on the wired remote controller.
5. There isn't limits of indoor unit function.

2.3 Specifications

2.3.1 Premium Wired Remote Controller

■ Model name : PREMTA000, PREMTA000A, PREMTA000B

- Dimensions: 137 X 121 X 16.5 mm
- Screen : 5” full color TFT LCD (480 X 272)
- Unit types : Air conditioner, Ventilator, DX ventilator
- Sensor : Temperature / Humidity
- Language : PREMTA000 : English , French, Spanish, Portuguese
  PREMTA000A : English, Italian, Russian, Chinese
  PREMTA000B : English, German, Polish, Czech

Appearance	Functions (Button Descriptions)		
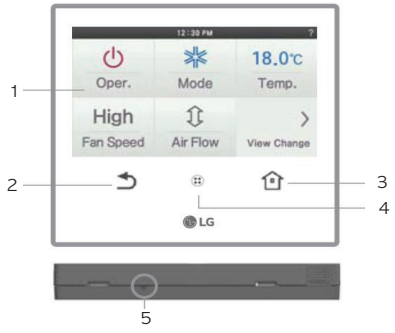	No.	Name	Function
	1	Operation display window	Displays operation and setting status
		Touch screen	Control of product operation and setting status
	2	Back button	Move to the previous setting screen
	3	Home button	Move to the default screen
	4	Wireless reception port	Receives wireless remote controller signal
	5	Reset button	Reset wired remote controller

■ Accessory

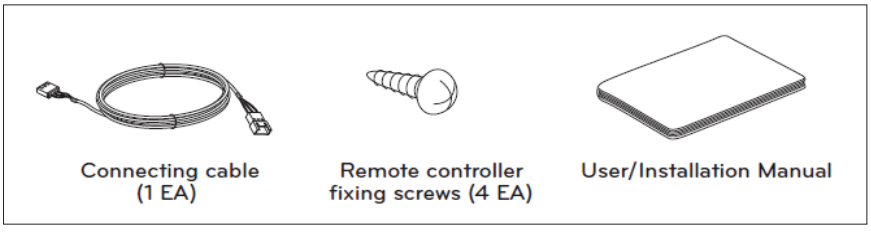

2.3 Specifications

■ Description of Function

Item	Description
ON/OFF	Air conditioner and ventilator will be turned on or off.
Power Cooling	It performs a strong cooling in a short period of time.
Heating Operation	Provides warm air to the space.
Dehumidification Operation	Removes moisture from the air.
Monsoon Dehumidifying Mode	This is monsoon region-specific dehumidification function.
Fan Only Operation	Only fan will circulate air.
Artificial Intelligence Automatic Operation	Operation provides heating and cooling to satisfy space requirements.
Fan speed Control	It moves to the fan speed selection screen.
Airflow Control	It moves to the direction of air flow selection screen.
Override control	Override master/slave selection function is, since Multi V III Heat Pump series model, the function to prevent product's different mode operation. If it setup as the slave, It blocks to change opposite run mode to outdoor unit cycle (cooling/heating)
Home leave (Unoccupied Mode)	The "Home Leave " function enables proper operation of indoor unit when a space is left for a period of time.
Hold	It is a function that holds the current mode of operation.
Zone Control	A function to control zone with duct type indoor units.
Check Room Temperature	It is a function that displays the room temperature.
Up/Down Vane Angle Setting	Used to set each vane angle
Plasma Purification	Improves indoor air quality
Energy-Saving Cooling	Energy-Saving cooling function enhances the comfort of the user and to improves the Energy-Saving performance by controlling the desired temperature during the cooling operation.
Fan Auto	Fan operation keeps on after thermal operation of indoor units.
Robot Cleaning	The robot cleaning function is a function to automatically clean the filter with the cleaner installed in the product after using the air conditioner for certain time period.
Ventilation kit	Function enables operation of an optional ventilation kit with indoor units.
Humidifier	Function enables a humidifier if one is installed to maintain space comfort.
Mosquito Away	Mosquito Away is a device to radiate frequency which mosquitoes don’t like.
Himalaya Cooling	Power Cooling + Auto swing
Comfort Saving	Only products with Comfort Saving function can use this.
General Ventilation Operation Mode	You can select the ventilation mode when it is connected to a ventilation product.
Ventilator with DX Operation Mode	It uses the heat exchanger inside the ventilation product to perform the ventilation operation function at the same time of cooling or heating operation.
Simple Reservation	Simple reservation function can be scheduled to stop while the system is in operation or to run while the system is not in operation.
Sleep Reservation	Sleep Reservation is a function that the air-conditioner runs in the sleep mode or stops after certain period of time while you are sleeping.
Turn-On Reservation	The unit is instructed to turn on at a set time automatically.
Turn-Off Reservation	The indoor unit is automatically turned off at the a set time.
Weekly Schedule	You can set the weekly schedule events in the unit of a week.
Yearly Schedule	You can set yearly schedules that can be applied by month.
Holiday ENERGY	It automatically stops on the set date.

2.3 Specifications

Item	Description
Check Energy Usage	You can check energy usage (operation time, power consumption).
Target Energy Consumption	This function is that user can set daily amount target usage.
Operation Time Limit	This function is that user can set daily amount target usage.
Time Limit Control	It is the function to save energy by operating the product only for the set time and automatically stopping the operation after starting the product operation.
Alarm Popup	This function allows you to set up a popup notice message for the Power Consumption and Operation Time Restriction feature.
Lock Setting	This function locks the remote controller's button operation to prevent the unauthorized operation by children or others.
Temperature Lock	The Temperature Lock function locks the ability to set the temperature beyond a preset value setting.
All Lock	It locks all button operation of the remote controller.
On/Off Lock	It locks the On/Off button operation of the remote controller.
Mode Lock	It locks the operation mode button operation of the remote controller.
Filter Sign Check	This function gives you the option to view a "Filter Sign" message so that you can check the status of the condition of the filter and gauge when it should be changed.
Elevation Grill Setting	This function allows you to operate the elevation grill for indoor unit filter cleaning.
Auto Dry	Auto dry removes moisture by drying the inside of the indoor unit after cooling operation once the indoor unit is turned OFF.
Wireless Module AP mode	Wireless Module AP mode function that wireless module change to AP mode.

2.3 Specifications

2.3.2 New Standard Wired Remote Controller

■ Model name : PREMTB100, PREMTBB10

- Dimensions: 120 X 120 X 16 mm
- Screen : 4.3 inch color display
- Unit types : Air conditioner, Ventilator, DX ventilator
- Sensor : Temperature / Humidity
- Language : English , French, Spanish, Portuguese, Italian, Russian, Chinese, German, Polish, Czech, Korean
- Button : Touch
- Digital output(on/off) : 1EA

Appearance	Functions (Button Descriptions)		
	No.	Name	Function
	1	Operation display window	Displays operation and setting status
	2	Back button	When you move to the previous stage from the menu's setting stage
	3	Up/down/left/ right button	When you change the menu's setting value
	4	OK button	When you save the menu's setting value
	5	On/Off button	When you turn ON/OFF the air conditioner

■ Accessory

Connecting cable (1 EA)

Remote controller fixing screws (4 EA)

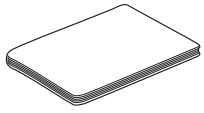

User/Installation Manual

DO cable (1EA)

2.3 Specifications

■ Description of Function

Item	Description
ON/OFF	Air conditioner and ventilator will be turned on or off.
Power Cooling	It performs a strong cooling in a short period of time.
Heating Operation	Provides warm air to the space.
Dry Operation	Removes moisture from the air.
Fan Only Operation	Only fan will circulate air.
AI / Auto Operation	Operation provides heating and cooling to satisfy space requirements.
Fan speed Control	It moves to the fan speed selection screen.
Airflow Control	It moves to the direction of air flow selection screen.
Hold	It is a function that holds the current mode of operation.
Zone Control	A function to control zone with duct type indoor units.
Check Room Temperature	It is a function that displays the room temperature.
Up/Down Vane Angle Setting	Used to set each vane angle
Plasma Purification	Improves indoor air quality
Energy-Saving Cooling	Energy-Saving cooling function enhances the comfort of the user and to improves the Energy-Saving performance by controlling the desired temperature during the cooling operation.
Fine dust status	It is the function to monitor dust value measured by the dust sensor mounted inside the air conditioner.
External equipment control	It is the function to set the contact point output of the external equipment control mode.
Fan Auto	Fan operation keeps on after thermal operation of indoor units.
Robot Cleaning	The robot cleaning function is a function to automatically clean the filter with the cleaner installed in the product after using the air conditioner for certain time period.
Ventilation kit	Function enables operation of an optional ventilation kit with indoor units.
Humidifier	Function enables a humidifier if one is installed to maintain space comfort.
Mosquito Away	Mosquito Away is a device to radiate frequency which mosquitoes don't like.
Electric Heater	It is the function to reinforce the heating capability by turning on the electric heater during the heating operation.
Himalaya Cooling	Power Cooling + Auto swing
Comfort Cooling	The comfort cooling is the function to automatically control the cooling strength to maintain the pleasant feeling without turning off the product after the indoor temperature reached the desired temperature.
Smart load control	Smart load control is the function to calculate the indoor air temperature, outdoor air temperature, and humidity to operate effectivly.
Defrost mode setting	Change the outdoor unit's defrost mode operation.
Wi-Fi pairing	It is the function to perform the pairing function of the Wi-Fi module connected to the indoor unit.
Low noise mode	It is the function to set the start and end time of the outdoor unit's low noise mode operation.
Advanced fan speed "Auto"	It is the function to automatically change the fan speed according to the difference between the indoor temperature and the desired temperature.
Delay time (exclusive for ventilation)	It is the function to set the ventilation operation to start after the delay time.
Midnight air cooling (ventilation interface)	It is the function to discharge indoor air and supply cool outdoor air into the indoor during summer nights to save energy.

2.3 Specifications

Item	Description
Language	Set the language to be displayed on the remote controller.
Screen saver timer	Adjust the screen Off time of the remote controller.
LCD brightness in idle	Adjust the remote controller's screen brightness.
Password	Set the password to prevent unauthorized change to remote controller settings.
Theme setting	Set the theme of the remote controller screen.
Simple timer	You can easily set the timer in the range of 1~7 hours in the units of 1 hour.
Sleep timer	Sleep timer is the function to operate the air conditioner in sleep mode before going to sleep for certain hours and stop the operation.
Turn-On Reservation	The unit is instructed to turn on at a set time automatically.
Turn-Off Reservation	The indoor unit is automatically turned off at the a set time.
Daily Schedule	It is the function that can check the status of the timer (schedule) saved in the remote controller.
Exception day	It is the function to automatically stop the operation on the set timer day.
Weekly Schedule	You can set the weekly schedule events in the unit of a week.
Yearly Schedule	You can set yearly schedules that can be applied by month.
Instantaneous power check	It is the function that can check the product's instantaneous power.
Energy consumption	You can check the energy consumption (operation time, power consumption).
Temperature Setback Timer	It is the function to return to the desired temperature after the set time after the product operation for energy saving.
Time Limit Control	It is the function to stop the product operation after the set time after starting the product operation for the energy saving.
Outdoor unit capacity setting	It is the function that can set the outdoor unit capacity.
Target instantaneous power setting	It is the function that can set the Instantaneous power's target value.
Target power consumption	It is the function to set the target power consumption per hour.
Target operation time	It is the function that can set the Instantaneous power's target value.
Alarm Popup	It is the function to set whether to use the target power consumption and the target operation time notice popup window.
All Lock	It locks all button operation of the remote controller.
On/Off Lock	It locks the On/Off button operation of the remote controller.
Mode Lock	It locks the operation mode button operation of the remote controller.
Temperature range lock	It is the function that can limit the range of the desired temperature that can be set in the wired remote controller. It works as soon as you press the [∧,∨(up/down)] Lower limit: 16°C~30°C Upper limit: 18°C~30°C
Filter Sign Check	When it becomes the time for the indoor unit filter cleaning, the filter cleaning message appears
Elevation Grill Setting	This function allows you to operate the elevation grill for indoor unit filter cleaning.
Auto Dry	Auto dry removes moisture by drying the inside of the indoor unit after cooling operation once the indoor unit is turned OFF.
Wireless Module AP mode	Wireless Module AP mode function that wireless module change to AP mode.

2.3 Specifications

2.3.3 Standard Wired Remote Controller

■ Model name : PREMTB001 / PREMTBB01

- Dimensions: 120 X 120 X 16 mm
- Screen : 4.3 inch mono display
- Unit types : Air conditioner, Ventilator, DX ventilator
- Sensor : Temperature
- Language : English

Appearance	Functions (Button Descriptions)		
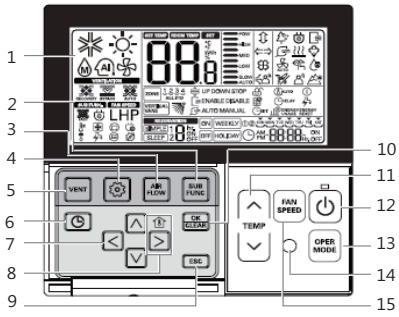	No.	Name	Function
	1	Operation display window	Displays operation and setting status
	2	Sub function Button	To select the additional operations function
	3	Airflow Button	To select the airflows
	4	Function Setting Button	To select the additional operations function
	5	Ventilation Button	For interlocking operations of air-conditioner and ventilator
	6	Reservation Button	To program the schedule
	7	Up/Down/Left/Right Button	To change the settings in the menu
	8	Room temperature	To check the indoor temperature
	9	ESC Button	To exit from the menu
	10	Set/Cancel Button	To save the settings in the menu
	11	Temperature Control Button	To change the desired temperature
	12	On/Off Button	To turn on/off with a remote controller
	13	Operation Mode Selection Button	To select the operating mode
	14	Wireless Remote Controller Receiver	Wireless Remote Controller Receiver
	15	Fan Speed Button	To select the fan speed

■ Accessory

Connecting Cable
1 EA, 10m

Screw (4 EA)

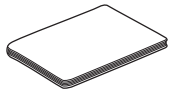

Owner's /
Installation manual

Inform label
(8EA-8Languages)

2.3 Specifications

■ Description of Function

Item	Description
ON/OFF	Air conditioner and ventilator will be turned on or off.
Power Cooling	It performs a strong cooling in a short period of time.
Heating Operation	Provides warm air to the space.
Dehumidification Operation	Removes moisture from the air.
Monsoon Dehumidifying Mode	This is monsoon region-specific dehumidification function.
Fan Only Operation	Only fan will circulate air.
Auto Operation	It automatically selects an operating mode.
Fan speed Control	It moves to the fan speed selection screen.
Airflow Control	It moves to the direction of air flow selection screen.
Override control	Override master/slave selection function is, since Multi V III Heat Pump series model, the function to prevent product's different mode operation. If it setup as the slave, It blocks to change opposite run mode to outdoor unit cycle (cooling/heating)
Check Room Temperature	It is a function that displays the room temperature.
Vane Angle Control	It can adjust the angles of air flow.
Plasma Purification	Improves indoor air quality
Energy-Saving Cooling	Energy-Saving cooling function enhances the comfort of the user and to improves the Energy-Saving performance by controlling the desired temperature during the cooling operation.
Electric Heater	It is the function to reinforce the heating capability by turning on the electric heater during the heating operation.
Fan Auto	Fan operation keeps on after thermal operation of indoor units.
Robot Cleaning	The robot cleaning function is a function to automatically clean the filter with the cleaner installed in the product after using the air conditioner for certain time period.
Ventilation kit	Function enables operation of an optional ventilation kit with indoor units.
Humidifier	Function enables a humidifier if one is installed to maintain space comfort.
Zone Control	A function to control zone with duct type indoor units.
Auto Cleaning	Auto cleaning is a function to remove moisture or mold after turning off the cooling system by drying the inside of indoor unit.
Mosquito Away	Mosquito Away is a device to radiate frequency which mosquitoes don’t like.
Himalaya Cooling	Power Cooling + Auto swing
Comfort Cooling	The comfort cooling is the function to automatically control the cooling strength to maintain the pleasant feeling without turning off the product after the indoor temperature reached the desired temperature.
Power Consumption	You can check energy usage (operation time, power consumption).
WLAN(Wireless LAN) Module Access Point Mode	It is the function to operate WLAN (Wireless LAN) module connected to the product in access point mode.
Smart Load Control	Smart Load Control is the function to operate by calculating the necessary efficiency from the indoor and outdoor air temperature and humidity.
Simple Reservation	Simple reservation function can be scheduled to stop while the system is in operation or to run while the system is not in operation.
Sleep Reservation	Sleep Reservation is a function that the air-conditioner runs in the sleep mode or stops after certain period of time while you are sleeping.
On Reservation	It turns ON automatically at the time programmed.

2.3 Specifications

Item	Description
Off Reservation	It turns OFF automatically at the time programmed.
Weekly Reservation	You can program daily schedule by week.
Holiday Reservation	The system will stop automatically on a set day.
Fast/Energy Saving	This function is to facilitate the ventilation function more efficiently by setting quick/energy-saving mode in the additional functions of ventilator.
Different Mode Drive	Different mode drive appears when the Indoor Unit have different operating modes if several Indoor Unit are installed for a single outdoor unit.
Self-diagnosis for Trouble Mode	It automatically runs a self-diagnosis when there is a trouble detected in the system.
Oil Change Warning	Only products with GHP(Gas Heat Pump) Product can use this.

2.3 Specifications

2.3.4 Simple Wired Remote Controller

■ Model name : PQRCVCL0Q / PQRCVCL0QW

- Dimensions: 120 X 64 X 15 mm
- Screen : 2.6 inch mono display
- Unit types : Air conditioner
- Sensor : Temperature
- Language : English

Appearance	Functions (Button Descriptions)		
	No.	Name	Function
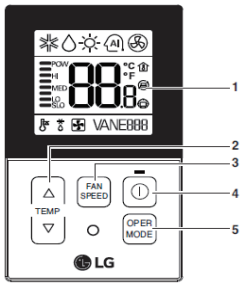	1	Operation display window	Displays operation and setting status
	2	Temperature Control Button	To change the desired temperature
	3	Fan Speed Button	To select the fan speed
	4	On/Off Button	To turn on/off with a remote controller
	5	Operation Mode Selection Button	To select the operating mode

■ Accessory

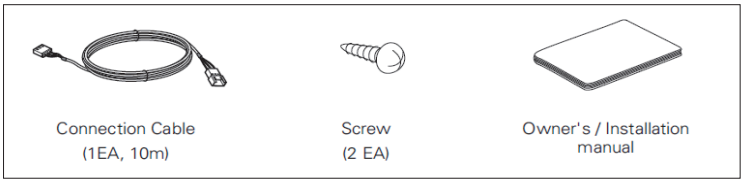

■ Description of Function

Item	Description
Cooling Mode	It cools the room by comfortable and Clean wind.
Heating Mode	It supplies warm wind to the indoor.
Auto Operation Mode	It makes the room cool using pleasant and fresh air quickly
Dehumidification Mode	It removes humidity while air-cooling Weakly.
Fan Mode	It blows the air as it is in the indoor, not the cold wind.
Fan Speed	It can easily control the fan speed.
Room Temperature Check	It displays the room temperature.
Child Lock	It is the function to use preventing children or others from careless using.
Auto Swing	This function is to adjust angle at which airflow is blow out.
Vane Angle Control	This function is to adjust angle at which airflow is blow out.

2.3 Specifications

2.3.5 Simple(Hotel) Wired Remote Controller

■ Model name : PQRCHCA0Q / PQRCHCA0QW

- Dimensions: 120 X 64 X 15 mm
- Screen : 2.6 inch mono display
- Unit types : Air conditioner
- Sensor : Temperature
- Language : English
- No mode Change

Appearance	Functions (Button Descriptions)		
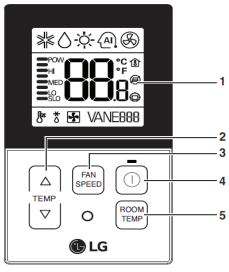	No.	Name	Function
	1	Operation display window	Displays operation and setting status
	2	Temperature Control Button	To change the desired temperature
	3	Fan Speed Button	To select the fan speed
	4	On/Off Button	To turn on/off with a remote controller
	5	Room temperature	To check the indoor temperature

■ Accessory

Connection Cable
(1EA, 10m)

Screw
(2 EA)

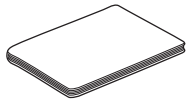

Owner's / Installation manual

■ Description of Function

Item	Description
Cooling Mode	It cools the room by comfortable and Clean wind.
Heating Mode	It supplies warm wind to the indoor.
Auto Operation Mode	It makes the room cool using pleasant and fresh air quickly
Dehumidification Mode	It removes humidity while air-cooling Weakly.
Fan Mode	It blows the air as it is in the indoor, not the cold wind.
Fan Speed	It can easily control the fan speed.
Room Temperature Check	It displays the room temperature.
Child Lock	It is the function to use preventing children or others from careless using.
Auto Swing	This function is to adjust angle at which airflow is blow out.
Vane Angle Control	This function is to adjust angle at which airflow is blow out.

2.3 Specifications

2.3.6 Wireless Remote Controller

■ Model name : PQWRHQ0FDB / PQWRCQ0FDB

- Dimensions: 153 X 51 X 26 mm
- Screen : 2 inch mono display
- Unit types : Air conditioner
- Sensor : Temperature

■ Accessory

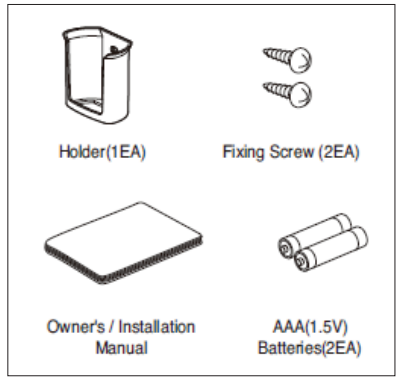

■ Description of Function

Appearance	Functions (Button Descriptions)		
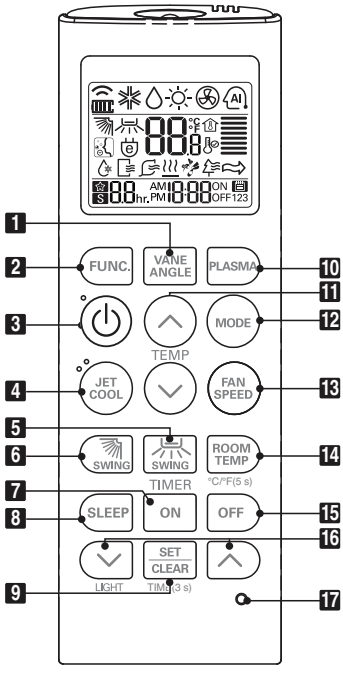	No.	Name	Function
	1	Vane angle Button	Used to set each vane angle.
	2	Function setting Button	Used to set or clear Auto Clean, Smart Clean, Electric heater or Individual vane angle control.
	3	ON/OFF Button	Used to turn on/off the unit.
	4	JET COOL Button	Speed cooling operates super high fan speed.
	5	LEFT/RIGHT AIRFLOW Button (OPTIONAL)	Used to set the desired left/right(horizontal) airflow direction.
	6	UP/DOWN AIRFLOW Button	Used to stop or start louver movement and set the desired up/down airflow direction.]
	7	ON TIMER Button	Used to set the time of starting operation.
	8	SLEEP TIMER Button	Used to set the time of sleeping operation.
	9	SET / CLEAR Button	Used to set/clear the timer. Used to set the current time(if it input for 3 s)
	10	PLASMA Button (OPTIONAL)	Used to start or stop the plasma-purification function.
	11	ROOM TEMPERATURE SETTING Button	Used to select the room temperature.
	12	OPERATION MODE SELECTION Button	Used to select the operation mode.
	13	INDOOR FAN SPEED SELECTION Button	Used to select fan speed in four steps low, medium, high and chaos.
	14	ROOM TEMPERATURE CHECKING Button	Used to check the room temperature.
	15	OFF TIMER Button	Used to set the time of stopping operation.
	16	TIMER SETTING(Up/Down)/ LIGHT Button	Used to set the timer. Used to adjust the brightness. (if it is not time adjust mode)
	17	RESET Button	Used to reset the remote controller.

2.4 Compatibility Table

2.4.1 Compatibility Table with Multi V indoor units

◎ : Compatibility is available but more detailed functions refer to MULTI V 4series IDU features.
● : Compatibility is available. X : Compatibility is unavailable. ▲ : Need to set-up the IR Receiver product

			Preminum	RS3		RS2		RS2 Simple		RS2 Simple Hotel		Better
			PREMTA000	PREMTBB10	PREMTB100	PREMTBB01	PREMTB001	PQRCVCL0Q	PQRCVCL0QW	PQRCHCA0Q	PQRCHCA0QW	PQWRHQ0FDB
												
Cassette	4way 	before Gen4	●	●		●		●		●		●
		from Gen4	◎	◎		◎		●		●		●
	2way/1way 	before Gen4	●	●		●		●		●		●
		from Gen4	◎	◎		◎		●		●		●
Duct	high sensible 	Gen4	◎	◎		◎		●		●		▲
	High Mid 	before Gen4	●	●		●		●		●		▲
		from Gen4	◎	◎		◎		●		●		▲
	Low 	before Gen4	●	●		●		●		●		▲
		from Gen4	◎	◎		◎		●		●		▲
	Built-in 	before Gen4	●	●		●		●		●		▲
		from Gen4	◎	◎		◎		●		●		▲
FAU		Gen2	●	●		●		●		●		▲
Ceiling Suspended		before Gen4	●	●		●		●		●		●
		from Gen4	◎	◎		◎		●		●		●
Console		before Gen4	●	●		●		●		●		●
		from Gen4	◎	◎		◎		●		●		●
floor Standing		before Gen4	●	●		●		●		●		●
		from Gen4	◎	◎		◎		●		●		●
		before Gen4	●	●		●		●		●		●
		from Gen4	◎	◎		◎		●		●		●
Wall Mounted		before Gen4	●	●		●		●		●		●
		from Gen4	◎	◎		◎		●		●		●
		Gen2	●	●		●		●		●		●
		Gen4	◎	◎		◎		●		●		●
		before Gen4	●	●		●		●		●		●
		from Gen4	◎	◎		◎		●		●		●
Hydro Kit			X	X		X		X		X		X
Eco V			●	●		●		X		X		X
Eco V DX			●	●		●		X		X		X

2.4 Compatibility Table

2.4.2 Compatibility Table with Multi and Single indoor units

● : Compatibility is available. X : Compatibility is unavailable ▲ : Need to set-up the IR Receiver product.

			Preminum	RS3		RS2		RS2 Simple		RS2 Simple Hote		Better
			PREMTA000	PREMTBB10	PREMTB100	PREMTBB01	PREMTB001	PQRCVCL0Q	PQRCVCL0QW	PQRCHCA0Q	PQRCHCA0QW	PQWRHQ0FDB
												
Single Split (H-Inverter)		Cassette	●	●		●		●		●		●
		Duct		●		●		●		●		▲
		Ceiling Suspended	●	●		●		●		●		●
Single Split (Standard Inverter)		Cassette	●	●		●		●		●		●
		Duct High	●	●		●		●		●		▲
		Duct Mid	●	●		●		●		●		▲
		Duct Low	●	●		●		●		●		▲
		Ceiling Suspended	●	●		●		●		●		●
		Console	●	●		●		●		●		●
		Wall Mounted	●	●		●		●		●		●
		Floor Standing	●	●		●		●		●		●
Multi		4way	●	●		●		●		●		●
		1way	●	●		●		●		●		●
		Duct Mid	●	●		●		●		●		▲
		Duct Low	●	●		●		●		●		▲
		Ceiling Suspended	●	●		●		●		●		●
		Console	●	●		●		●		●		●
		Wall Mounted	●	●		●		●		●		●
			●	●		●		●		●		●
Therma V		Split Mid Temp	X	X		X		X		X		X
		Split High Temp	X	X		X		X		X		X
		mono block	X	X		X		X		X		X

3. Central Controller

3.1 Product Feature List

3.2 Functions

3.3 Example of installing

3.4 Product Description

3.4.1 AC Ez

3.4.2 AC Ez Touch

3.4.3 AC Smart IV

3.4.4 ACP IV

3.4.5 BACnet

3.4.6 ACP Lonworks

3.4.7 AC Manager IV

3.4.8 AC Manager 5

3.4.9 PDI

3.4.10 ACS I/O Module

3.4.11 Chiller Option Kit

3.1 Product Feature List

3.1.1 Centralized Controller Feature List

			AC Ez	AC Ez Touch	AC Smart IV / AC Smart BACnet	ACP IV	ACP BACnet	ACP Lonworks	AC Manager IV[3]	AC Manager 5[3]
Product	Air conditioner		O[1]	O	O	O	O	O	O	O
	Ventilation (ERV/ERV DX)		O[2]	O	O	O	O	O	O	O
	SYSTEM BOILER		-	O	O	O	O	O	O	O
	AHU		-	-	O	O	O	O	O	O
	Chiller		-	-	O	O	O	O	O	O
	ACS I/O		-	-	O[4]	O	O[4]	O[4]	O	O
	DO		-	-	2	4	4	2	-	-
	DI		-	1	2	10	10	2	-	-
Additional function	Add Drawing		-	-	O[4]	O	O[4]	O[4]	O	O
	Group management		-	-	O[4]	O	O[4]	O[4]	O	O
	ACO		-	O	O[4]	O	O[4]	O[4]	O	O
	SET BACK		-	O	O[4]	O	O[4]	O[4]	O	O
	2 SET		-	O	O	O	O	O[4]	O	X[5]
	Change alarm		-	Filter, Oil	Filter, Oil	Filter, Oil	Filter, Oil	Filter, Oil	Filter, Oil	Filter, Oil
	Indoor unit lock		-	O	O[4]	O	O[4]	O[4]	-	-
	Cycle		-	-	O[4]	O	O[4]	O[4]	O	O
Schedule			O	O	O[4]	O	O[4]	O[4]	O	O
Auto control	Peak control	Priority control	-	O	O	O	O	O[4]	O	O
		Outdoor unit capacity control	-	-	O[4]	O	O[4]	O[4]	O	O
	Demand control	Priority control	-	-	O[4]	O	O[4]	O[4]	O	O
		Outdoor unit capacity control	-	-	O[4]	O	O[4]	O[4]	O	O
	Time limit control		-	-	O[4]	O	O[4]	O[4]	O	O
	InterLocking		-	-	O[4]	O	O[4]	O[4]	O	O
Energy Navigation			-	-	O[4]	O	O[4]	O[4]	-	O
Energy report	Power		-	O	O[4]	O	O[4]	O[4]	O	O
	GAS		-	-	O[4]	O	O[4]	O[4]	O	O
	Run time		-	-	O[4]	O	O[4]	O[4]	O	O
	Email		-	-	O[4]	O	O[4]	O[4]	-	-
	PC/USB		-	-	O[4]	PC	O[4]	O[4]	PC	PC
Trend reporting			-	-	-	-	-	-	O	O
History	Report items (Control/Error)		-	Error	O[4]	O	O[4]	O[4]	O	O
	Send email		-	-	O[4]	O	O[4]	O[4]	O	O
	Save to PC/USB		-	-	O[4]	O	O[4]	O[4]	PC	PC
etc	Summer time		-	O	O[4]	O	O[4]	O[4]	-	-
	Outdoor Unit Oil-Return Operation		-	-	O[4]	O	O[4]	O[4]	-	-
	User Authority		-	Password	O[4]	O	O[4]	O[4]	O	O
	PC Access		-	O	O[4]	O	O[4]	O[4]	O	O

1) Except for some feature (individual lock, limit temp, etc…)

2) Except for some feature (user mode, additional function, etc…)

3) ACP IV or AC Smart IV is needed.

4) This Function is possible to use in Web Only. (BMS Point is not applied)

5) Expected to 3Q, 2018

3.1 Product Feature List

3.1.2 Centralized Controller Compatibility List

■ Compatibility between Controllers

Master (A) \ Slave (B)	AC Ez	AC Ez Touch	AC Smart IV	ACP IV	ACP BACnet	ACP Lonworks	PDI
AC Ez	O	X	X	X	X	X	X
AC Ez Touch	O	O	X	X	X	X	O
AC Smart IV	O	O	O	X	X	X	O
ACP IV	O	O	O	X	X	X	O
ACP BACnet	O	O	O	X	X	X	O
ACP Lonworks	O	O	O	X	X	X	O
PDI	X	X	X	X	X	X	X

■ Compatibility with Integrator

Integrator \ Controller	AC Ez	AC Ez Touch	AC Smart IV	ACP IV	ACP BACnet	ACP Lonworks	PDI
AC Manager IV	X	X	O	O	O	O	X
AC Manager 5	X	X	O	O	O	O	X

■ Compatibility with Product

Controller \ Product		MULTI V	ERV	SYSTEM BOILER	GHP	MULTI	SINGLE	AHU	CHILLER
AC Ez		O	O	-	O	O	O	-	-
AC Ez Touch		O	O	O	O	O	O	-	-
AC Smart IV		O	O	O	O	O	O	O	O[2)]
ACP IV		O	O	O	O	O	O	O	O[2)]
AC Manager IV		O	O	O	O	O	O	O	O[2)]
AC Manager 5		O	O	O	O	O	O	O	O[2)]
ACP BACnet		O	O	O	O	O	O	O	-
ACP Lonworks		O	O	O	O	O	O	O	-
PDI Standard		O	O[3)]	O	O	O	O	-	-
PDI Premium		O	O[3)]	O	O	O	O	-	-
Dry contact	Contact	O	O	O	O	O	O[1)]	-	-
	Comm.	O	O	-	O[1)]	O	O	-	-

1) It depends on product and need to check PDB about central control supporting
2) Required Chiller option kit (PCHLLN000)
3) Only direct cooling ventilation

3.1 Product Feature List

■ Connectable Indoor units count

Product	Max. No. of IDUs	Possible IDU Address	Max. No. of ERV Units	Possible ERV address	Max. No. of A/C+ERV	Max. No. of AHU	Max. No. of Chiller
AC Ez	32	00-FF	32	00-FF	32	NA	NA
AC Ez Touch	64	00-FF	64	00-FF	64	NA	NA
AC Smart IV	128	00-FF	128	00-FF	128	5(16) [1]	Optional [2]
AC Smart BACnet	128	00-FF	64	00-FF	128	5(16) [1]	Optional [2]
ACP IV	256	00-FF	256	00-FF	256	10(16) [1]	Optional [2]
ACP BACnet	256	00-FF	128	00-FF	256	10(16) [1]	Optional [2]
ACP Lonworks	64(48) [3]	00-FF	64	00-FF	64	16 [4]	NA
PDI Standard	128	00-FF	-	-	128	NA	NA
PDI Premium	128	00-FF	-	-	128	NA	NA

1) Max number of AHU based on Multi Fan AHU with Modbus. ( ) is based on LGAP not Modbus.
2) Needs chiller option kit. But that not supporting BMS.
3) ACP Lonworks for North America can supporting 48 IDUs.
4) ACP Lonworks only supporting LGAP.

3.1 Product Feature List

■ Compatibility with ACS I/O Module

1) ACS I/O Module linkable

Controller / IO Module (C)	AC Ez	AC Ez Touch	AC Smart IV	AC Smart BACnet	ACP IV	ACP BACnet	ACP Lonworks
ACS I/O Module	X	X	O	O[1]	O	O[1]	O[1]

1) This Function is possible to use in Web Only. (BMS Point is not applied)

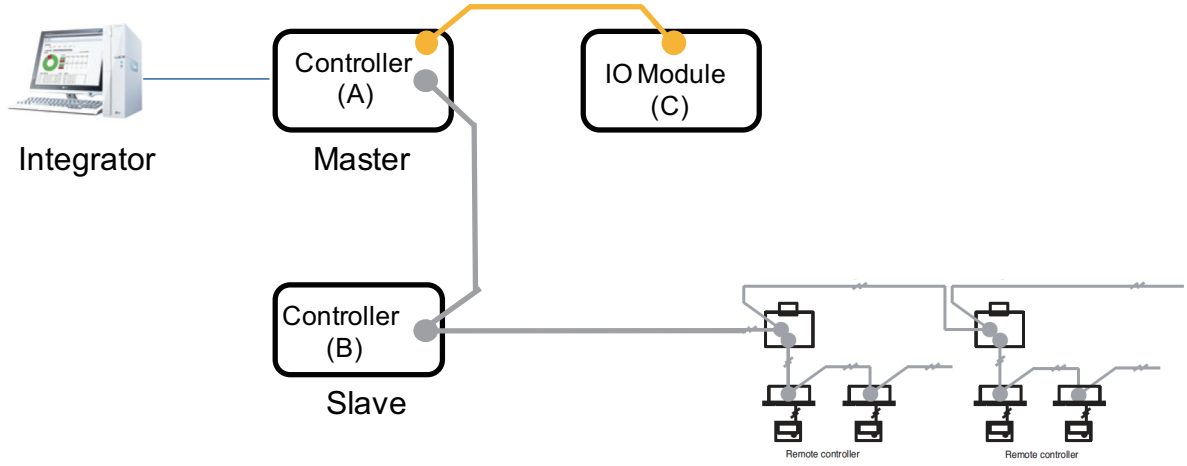

2) Maximum number of linkable devices

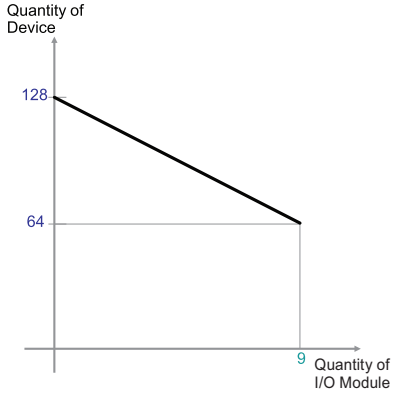

Quantity of I/O Module	Quantity of Device
0	128
1	121
2	114
3	107
4	100
5	93
6	86
7	79
8	72
9	64

<AC Smart IV>

Quantity of I/O Module	Quantity of Device
0	256
1	248
2	240
3	232
4	224
5	216
6	208
7	200
8	192
9	184
10	176
11	168
12	160
13	152
14	144
15	136
16	128

<ACP IV>

* Devices: Indoor units, ERV, DI/DOs, DOKITs, AWHPs, AHUs

❊ If more details, please refer to the manual of its product.

3.2 Functions

■ Energy navigation

Energy navigation is the function to set the target usage amount to limit the monthly power consumption and to control so that the total accumulated power consumption does not exceed the target usage amount. It performs total of 7 control levels with the estimated/actual usage amount exceeding ratio compared to the monthly target usage amount. For the control method, there are indoor unit operation ratio, outdoor unit capacity control, and indoor unit operation control.

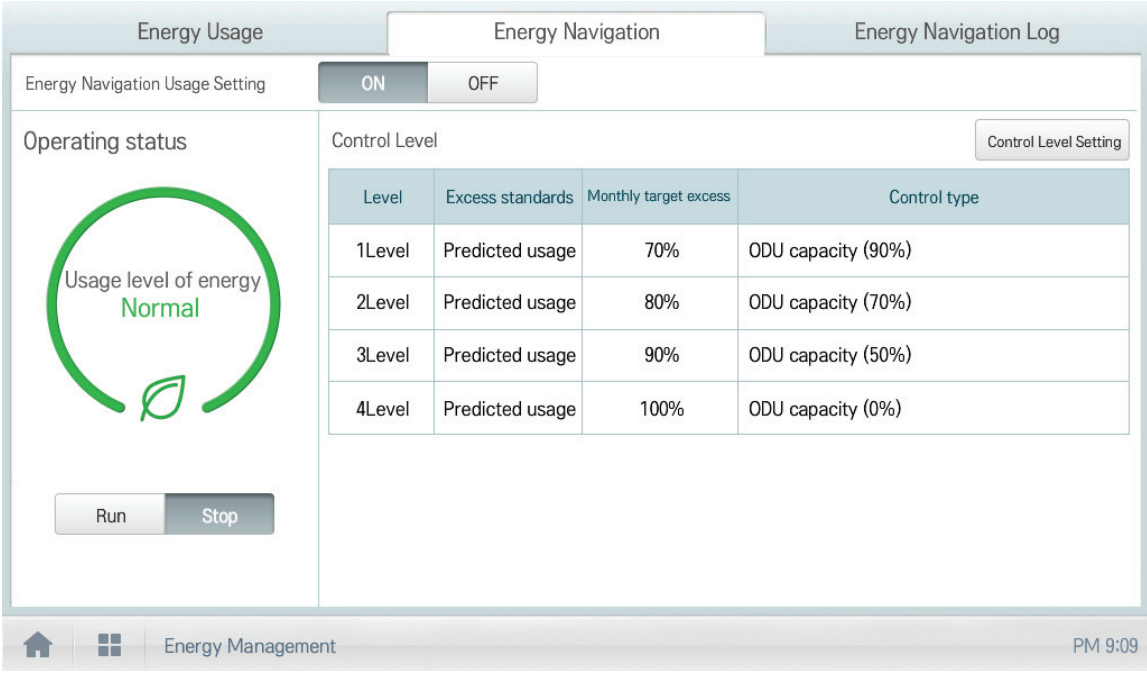

Level	Excess standards	Monthly target excess	Control type
1Level	Predicted usage	70%	ODU capacity (90%)
2Level	Predicted usage	80%	ODU capacity (70%)
3Level	Predicted usage	90%	ODU capacity (50%)
4Level	Predicted usage	100%	ODU capacity (0%)

[Control Level]

Supports the level of the set control level, exceeding condition, monthly target exceeding ratio (%), and control method

- Level: maximum of 7 levels
- Excess standards
  - Predicted usage amount: estimated period usage amount of 1 month starting from the base date
  - Actual usage amount: actual period usage amount until today from the base date
- Monthly target excess (%)
  - Ratio of the excess standard compared to the monthly target usage amount (%)
  - You can set in the unit of 10% from minimum 70% to maximum 130%
- Control type
  - IDU Operation Rate: Set the 0~100% target operation ratio and control peak according to the priority of the group
  - ODU capacity: Set the 0~100% target operation ratio and control peak according to the outdoor unit capacity operation ratio
  - IDU: Control according to the indoor unit control setting (refer to Indoor unit operation control setting)

3.2 Functions

■ Energy Usage

Energy usage sets the target usage to control the energy navigation and checks the device's power usage and operation time with graph and table.

[How to read the energy usage graph (energy consumption, daily)]

The method to read the energy usage daily graph is as follows.

1. In the main menu, click (touch) [Energy management] menu icon.
2. In the group list, click (touch) the All Group.
   - Entire group displays all information.
3. In the viewing period setting area, click (touch) [◀/▶] button to set the viewing period corresponding to the current month.
   - The start date is set as the base date.
4. In the energy usage information display area, check the energy usage contents.
   - You can check the daily usage, period + estimated usage, and monthly target amount.
   - Read the daily value at the left side of the daily usage.
   - For the period + estimated usage, and monthly target, read the accumulated value.
   - To change the viewing method of the energy report information, click (touch) [View graph] or [View table] button.
   - When you uncheck the graph condition, it is not displayed in the graph.

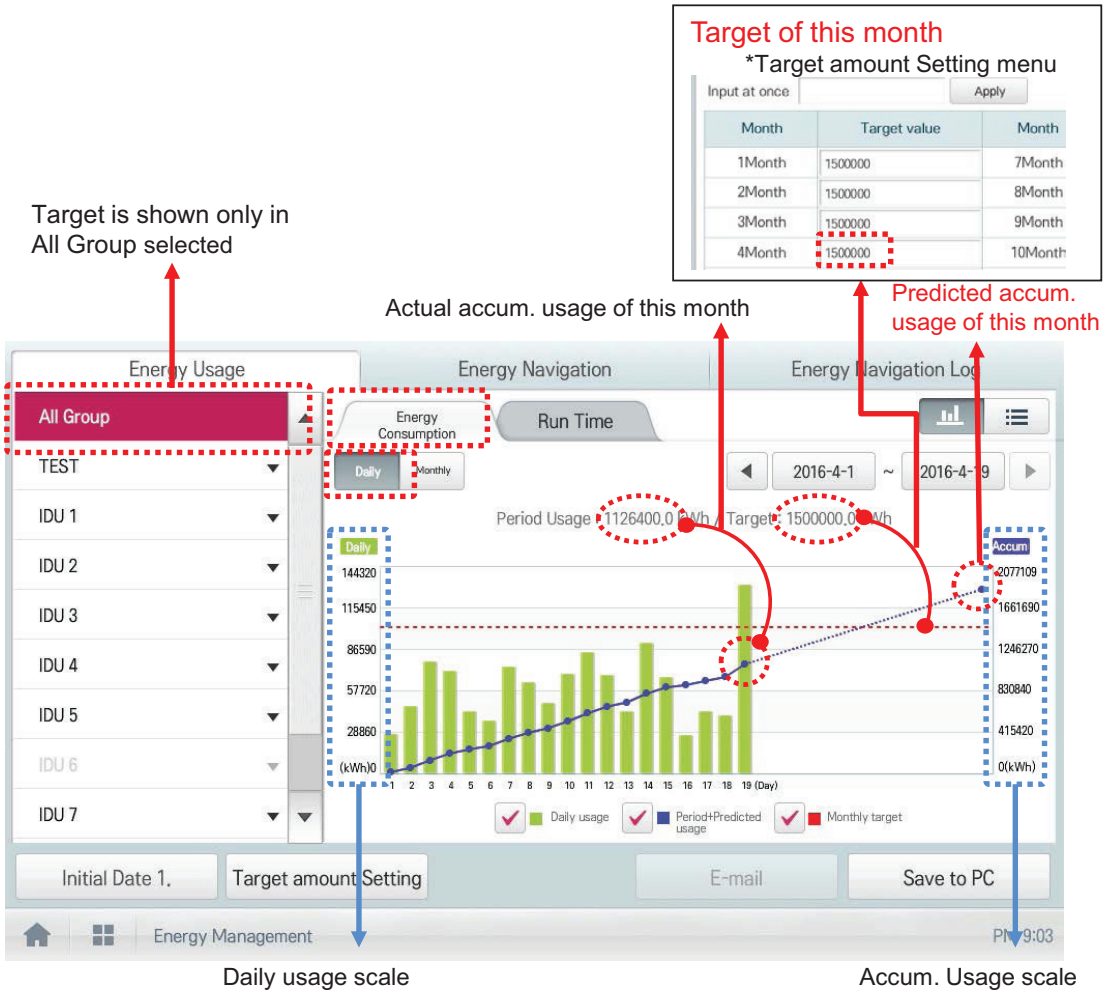

3.2 Functions

[How to read the energy usage graph (energy consumption, monthly)]

The method to read the energy usage monthly graph is as follows.

1. In the main menu, click (touch) [Energy management] menu icon.
2. In the viewing unit, click (touch) Monthly.
3. In the group list, click (touch) All Group.
   - Entire group displays all information.
4. In the viewing period setting area, touch (click) [◀/▶] button to set the viewing period corresponding to the current year.
   - The start date is set as the base date.
   - The period from Jan. ~ Dec. is automatically set.
5. In the energy usage information display area, check the energy usage contents.
   - You can check the monthly usage, monthly target amount, period + estimated usage, previous year usage, and yearly target amount.
   - For the monthly usage and monthly target amount, read the monthly value in the left side.
   - For the period + estimated usage, previous year usage, and yearly target amount, read the accumulated value.
   - To change the viewing method of the energy report information, click (touch) [View graph] or [View table] button.
   - When you uncheck the graph condition, it is not displayed in the graph.
   - If the monthly usage is greater than the monthly target mount, exclamation mark is displayed.

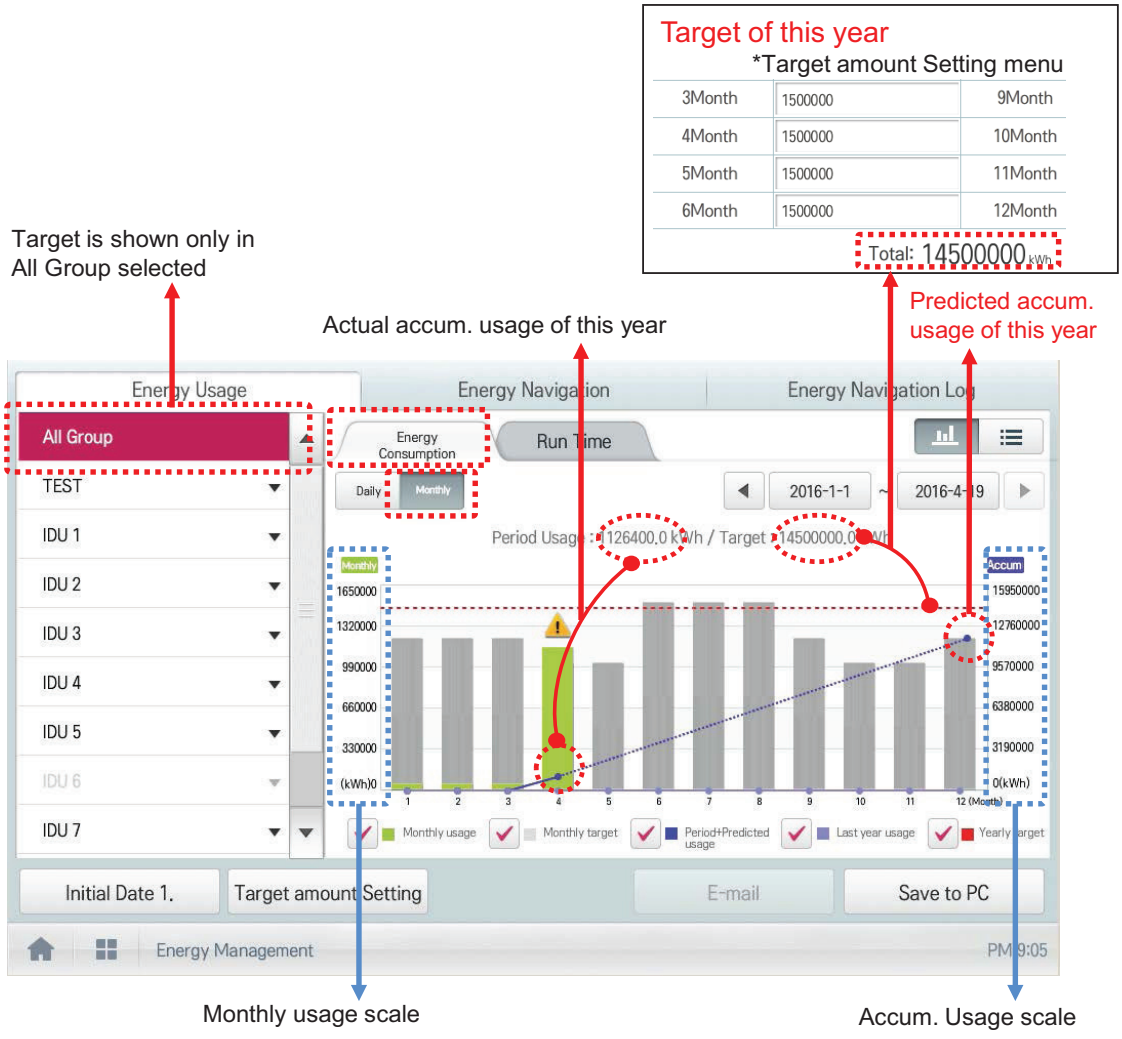

3.2 Functions

■ Energy Report

1) Monthly Report

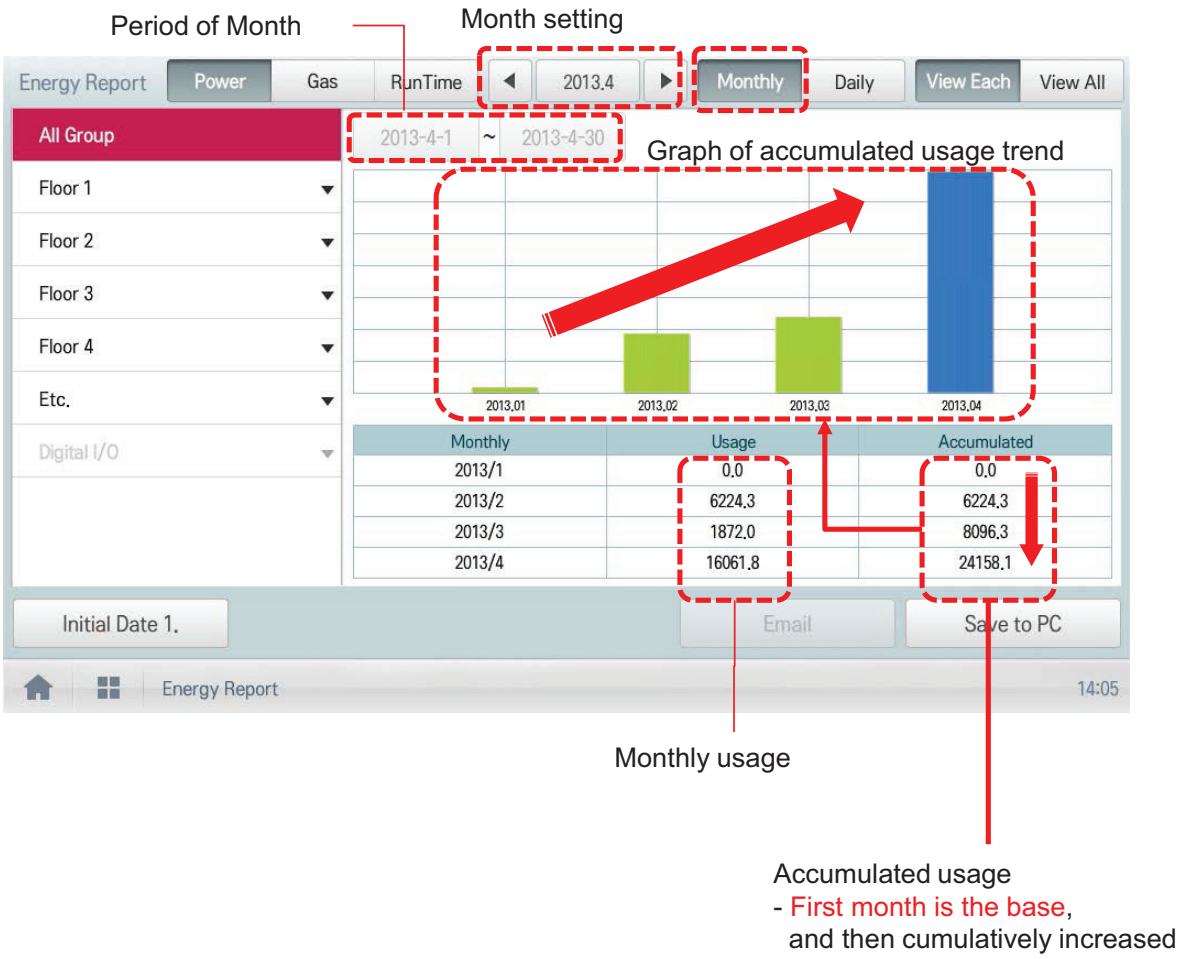

Ex) Monthly usage of 2013/4
= Accum. usage of last day in Apr - Accum. usage of last day in Mar

2) Daily Report

You can set the specific period (within 31 days)

Month setting

Energy Report | Power | Gas | RunTime | 2014.3 | Monthly | Daily | View Each | View All

All Group | 2014-3-1 ~ 2014-3-29

TEST
VENT
AWHP
IDU+VENT
IDU

Daily usage graph

1 7 13 19 25 29

3/1	28650.7	6	32289.3	11	39998.1	16	30517.8	21	29038.1	26	31886.2
2	29350.2	7	38129.8	12	38922.0	17	34557.6	22	29030.6	27	31882.0
3	28733.1	8	31926.9	13	41742.1	18	35126.8	23	39985.1	28	29234.4
4	39026.6	9	35397.5	14	36512.8	19	32071.7	24	39723.6	29	45461.8
5	29240.3	10	39813.6	15	22515.7	20	38688.7	25	38358.7		

Initial Date 1. | Email | Save to PC

Energy Report | PM 01:03

Display the Initial Date

Daily Usage

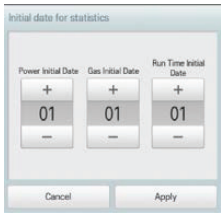

You can set the Initial date for Energy report in [Environment] > [General Setting]

Ex) Period of January report

Initial Date is 1 : 1st Jan. ~ 31th Jan.

Initial Date is 5 : 5th Jan. ~ 4th Feb.

CAUTION

***up to 6 monthly data can be stored**
After v2.56.1, monthly data can be stored up to 2 years

3.2 Functions

■ Peak control

Peak control limits peak power consumption. You can set the target operating rate so that total power consumption does not exceed the set limit. To prevent power consumption from exceeding the limit, the system will switch automatically between cooling and fan modes. Also it will limit heating operation by switching automatically between Heat and OFF modes.

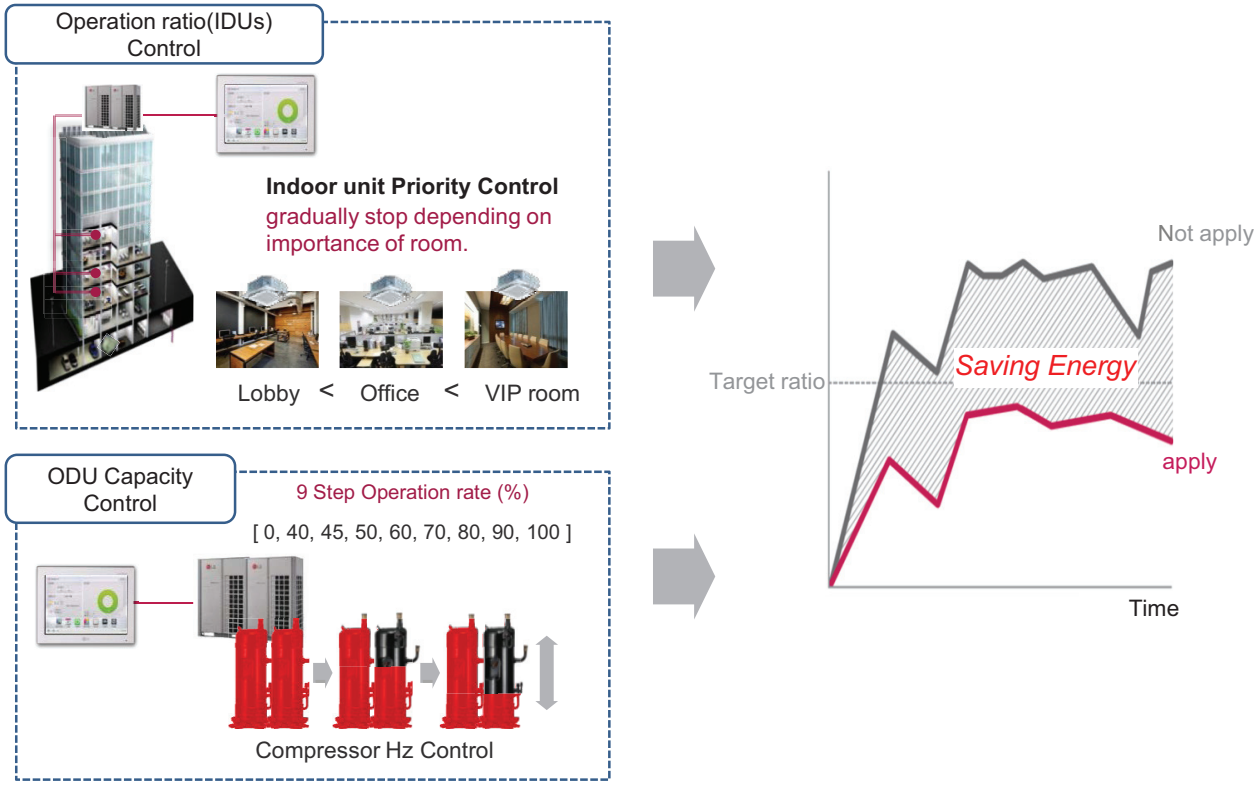

[Control Configuration]

1) Priority Control
   Control based on group priority. Refer to below for detail behavior.

   • Switched between cooling and fan modes by priority.
   • Switched between Heat and OFF modes by priority.
   • Cycles every set time.

2) Outdoor Unit Control
   Controls based on outdoor unit capacity limit.

3.2 Functions

■ 2 Setpoint

- Auto Changeover

Set the auto change over function to switch the operation mode automatically to keep the proper room temperature. When Room Temp. > Upper, request Cool operation mode. When Room Temp. < Lower, requests Heat operation mode. When Room Temp. ≤ (Upper - Temperature difference) or Room Temp. ≥ (Lower + Temperature differece), requests Fan operation mode.

- Setback

Set the setback function to control the proper room temperature when the indoor unit is turned off.

<Occupied : Auto Changeover>

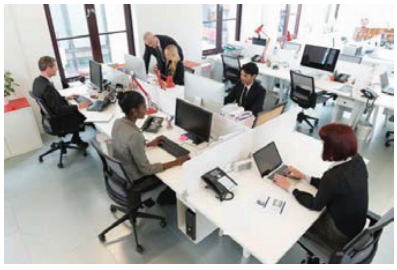

<Unoccupied : Setback>

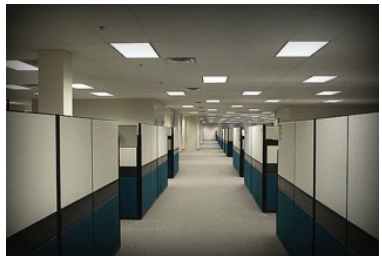

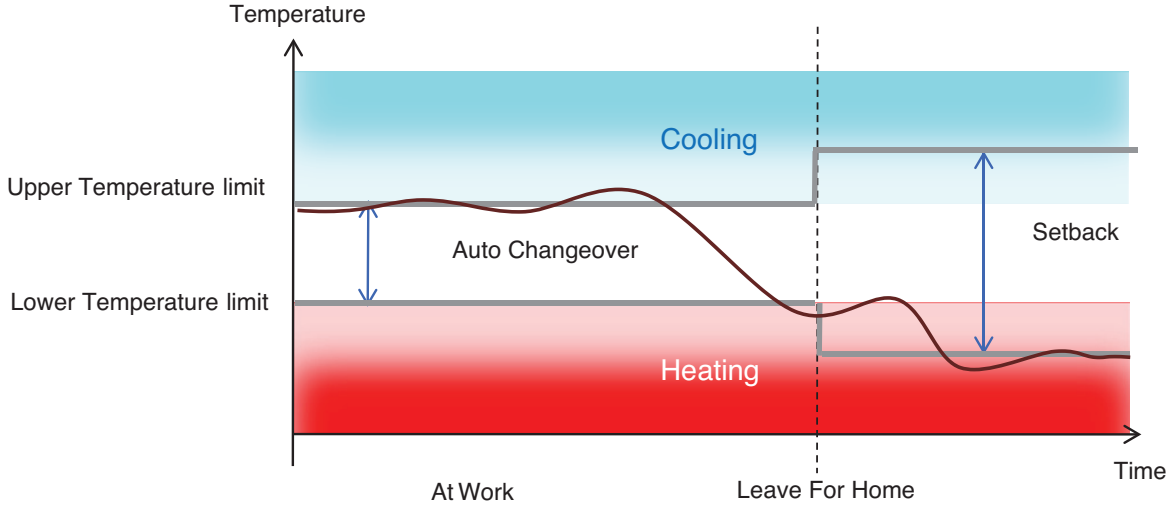

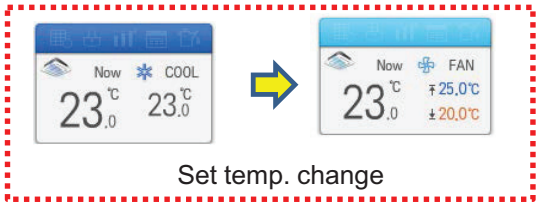

- **Temperature Range**
  - **Auto Changeover**
    : 18℃~30℃ / 64°F~86 °F
  - **Setback**
    Cooling Start : 21℃~40 ℃ / 70°F~104 °F
    Heating Start : 1℃~20 ℃ / 34°F~68 °F

NOTES

This function is for Heat Recovery system or Single heat pump. Otherwise correctly working is not guaranteed.

3.2 Functions

1) Auto Changeover

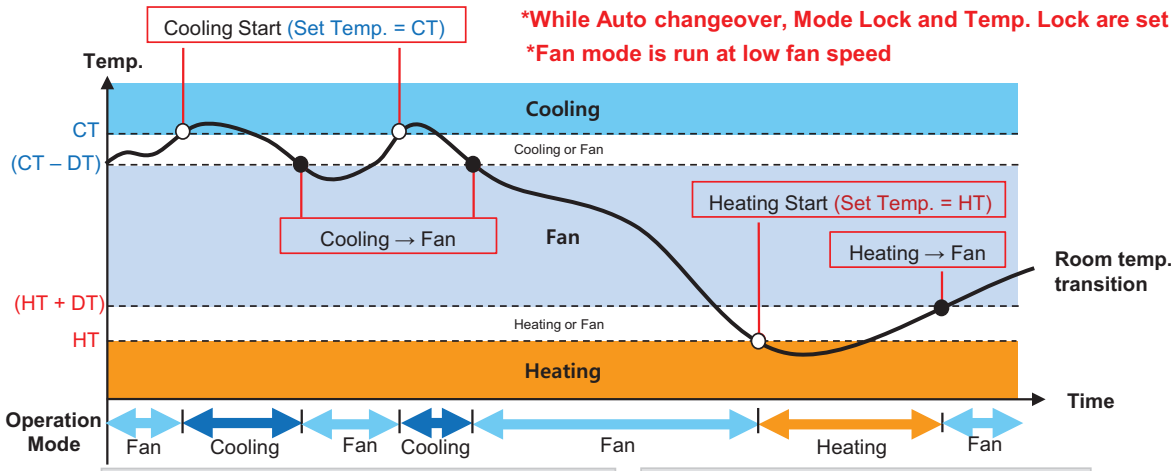

- CT : Cooling Start Temp. (18℃~30℃ / 64℉~86℉)
- HT : Heating Start Temp. (18℃~30℃ / 64℉~86℉)
- DT : Differential Temp. (0.5℃ ~3℃ / 1℉~6℉)

Example) CT : 25℃, HT : 20℃, DT : 1℃
- ☞ Cooling Start : Higher than 25℃
- ☞ Heating Start : Lower than 20℃
- ☞ Cooling → Fan : 24℃ (CT - DT)
- ☞ Heating → Fan : 21℃ (HT + DT)

2) Setback

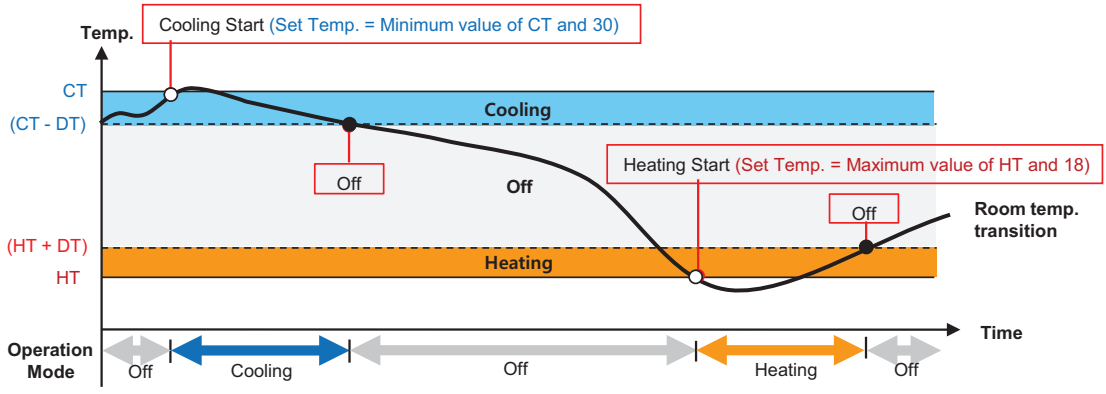

- CT : Cooling Start Temp. (21℃~40℃ / 70℉~104℉)
- HT : Heating Start Temp. (1℃~20℃ / 34℉~68℉)
- DT : Differential Temp. (0.5℃ ~3℃ / 1℉~6℉)

Example) CT : 33℃, HT : 5℃, DT : 3℃
- ☞ Cooling Start : Higher than 33℃
- ☞ Heating Start : Lower than 5℃
- ☞ Cooling → Off : 30℃ (CT - DT)
- ☞ Heating → Off : 8℃ (HT + DT)

*This logic could be different depending on the S/W version

3.2 Functions

■ Time-limit Operation

The time-limit operation is to limit the amount of time the devices (indoor unit, ERV, DOKIT, AWHP, and some AHU) are running individually. By setting the device operation time in advance, you can control for how long a device works and have it stop automatically.

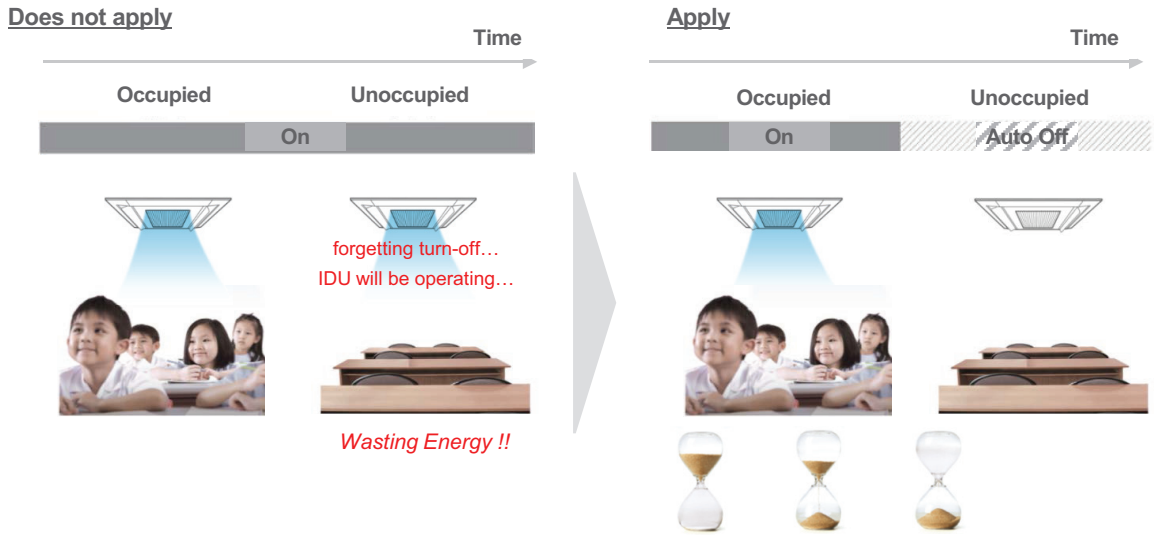

• Hours to Off(Hour)
  - Select the operation time limit of an operation group. The devices included in the group operate for the selected time then stop automatically.

• Days: Select which day(s) of the week to run the time-limit operation.

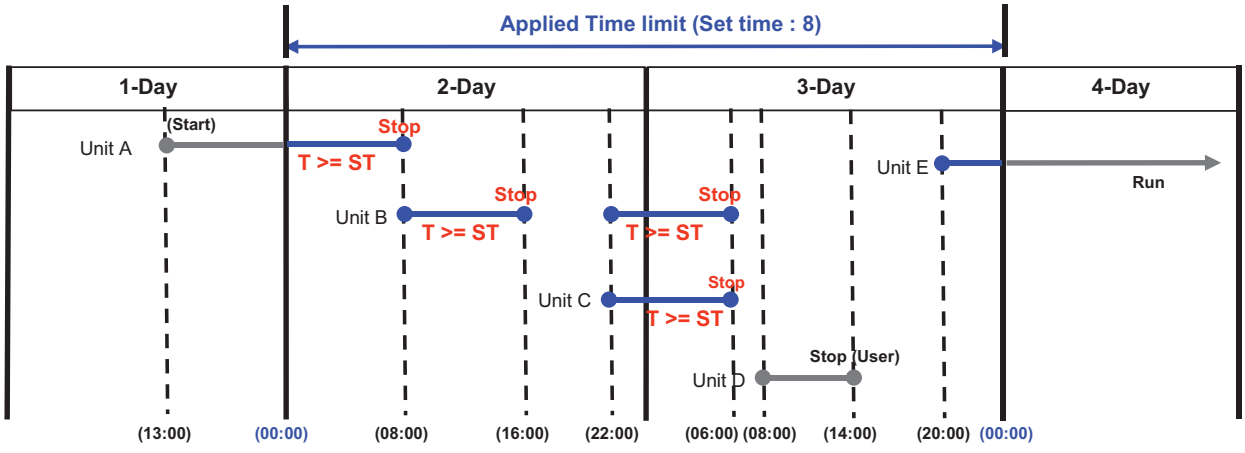

NOTES

For the time-limit operation, you cannot register chiller, AHU(Modular Fresh Air, Modular Heat Recovery, DOAS), DI/DO, Expansion I/O.

3.2 Functions

■ Interlocking

Associated device control is a function which interlocks more than one device and then controls output movements when the input conditions are met.
In order to operate associated device control, you shall arrange the devices to be interlocked in a single pattern and then apply the control setting. It is described here how to create and manage a pattern and then proceed with associated device control.

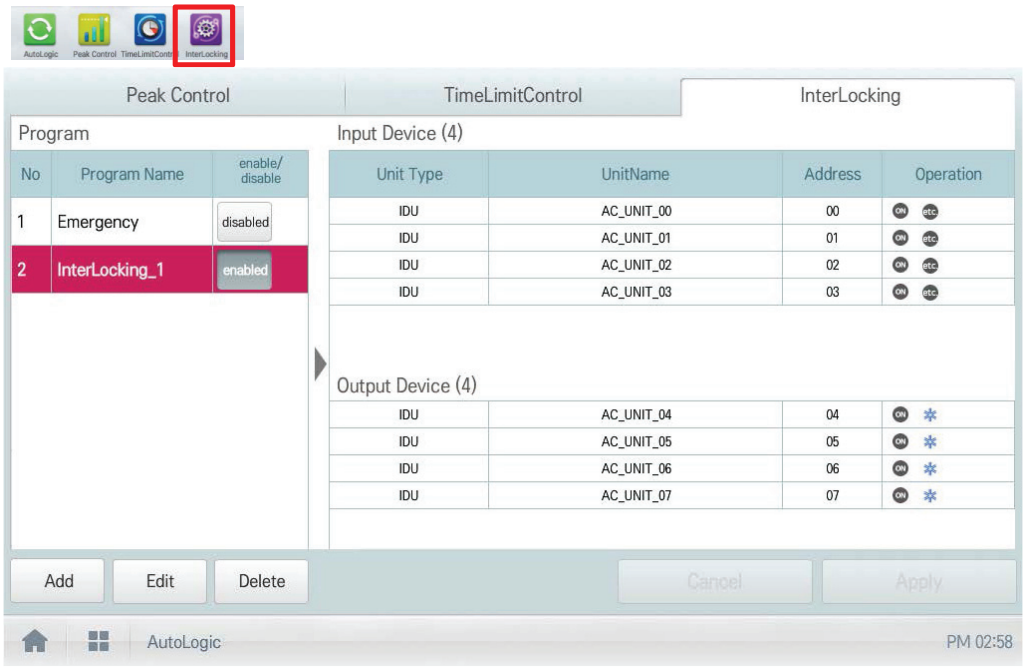

• Pattern type

Item	Description
Event Log Only	• Pattern that runs output control demand when the input conditions are met.
Group Clone	• Pattern that output device follows the input device state as it is. • You can add only 1 device to the input condition, and only the device with the same attributes with the added input device is registered.
Alarm ACK Required	• Pattern that is recognized as emergency situation when the input conditions are met. • Emergency icon is displayed next to the emergency pattern name to indicate emergency situation
1:1 Program	• Program to set output device same to input device.

NOTES

Maximum number of patterns is 40.
Maximum number of groups is 40.

3.2 Functions

1) Event Log Only

IF “CONSTANT < AI(temperature, etc…) < CONSTANT" THEN “Control command"

Ex)

• Interlocking with 3rd party equipment (Sensors, Fans, Switches…)

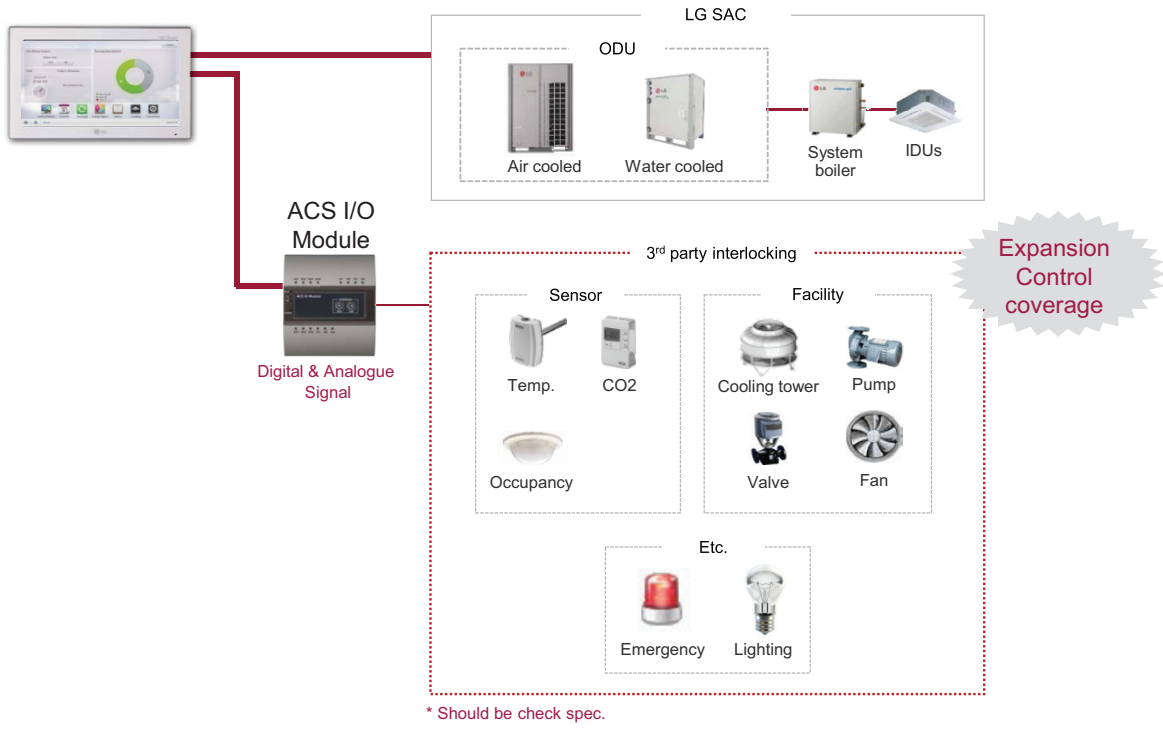

How to set)

Pattern 1: IF "AI < 5" THEN "AO = 0"

Pattern 2: IF "5 <= AI < 10" THEN "AO = 15"

Pattern 3: IF "10 <= AI < 15" THEN "AO = 30"

Pattern 4: IF "15 <= AI < 20" THEN "AO = 45"

Pattern 5: IF "20 <= AI < 25" THEN "AO = 60"

2) Group Clone

Pattern that output device follows the input device state as it is.

Ex)

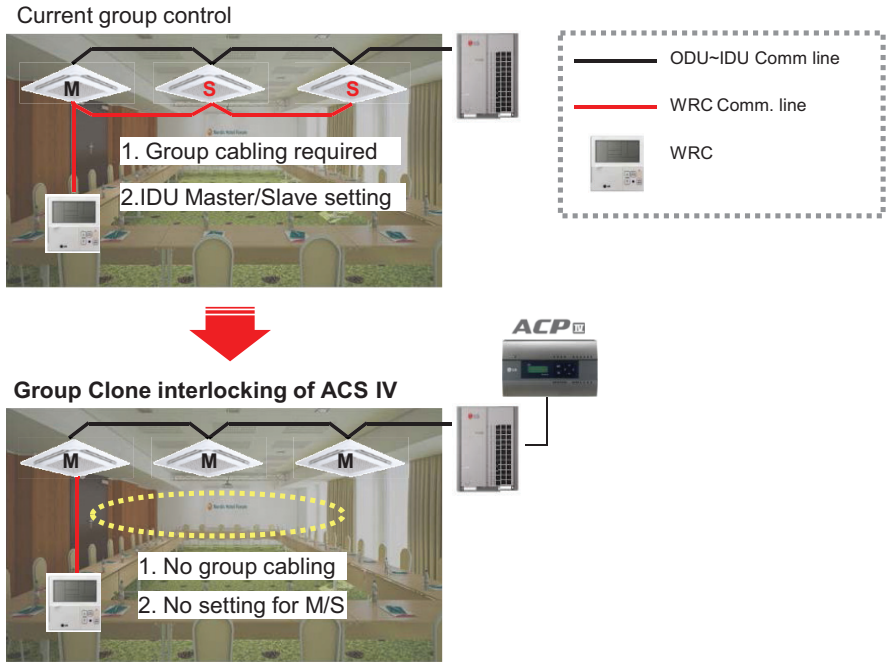

How to set)

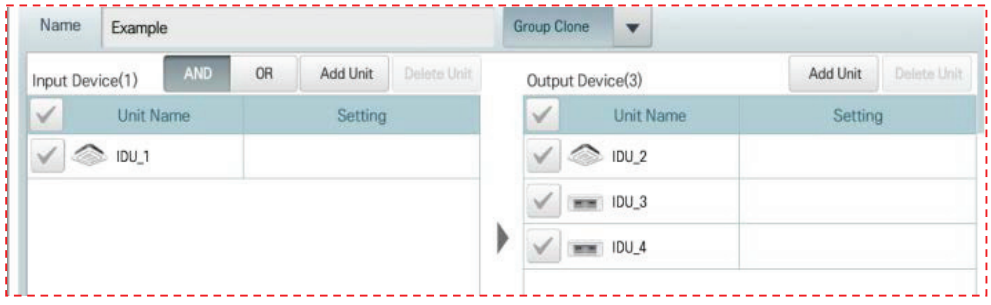

*For Group Clone, only one unit can be Input device

NOTES

In this case, output device can control by input devices only.

3) Alarm ACK Required

When emergency condition is occurred, building manager can take action quickly.

- When pre-set emergency pattern is occurred, red alert is appeared at main page.
- All IDUs will be stopped and No one can control before emergency clear.

Ex)

If a situation set as emergency pattern occurs, entire home screen turns red for alarm, and other control signals are blocked.

*You can set only 1 emergency pattern.

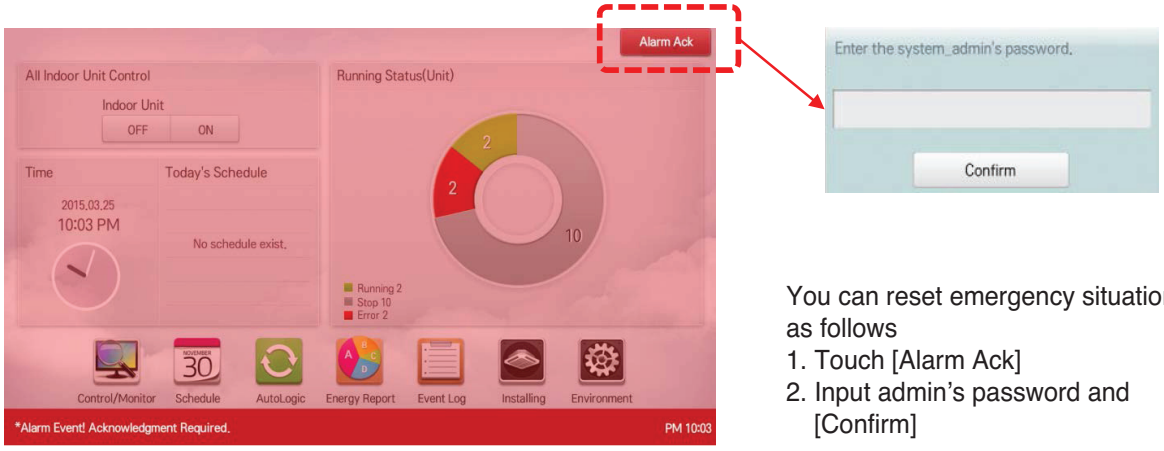

You can reset emergency situation as follows

1. Touch [Alarm Ack]
2. Input admin's password and [Confirm]

*Emergency situation notice may be generated again until the cause of emergency situation is removed.

How to set)

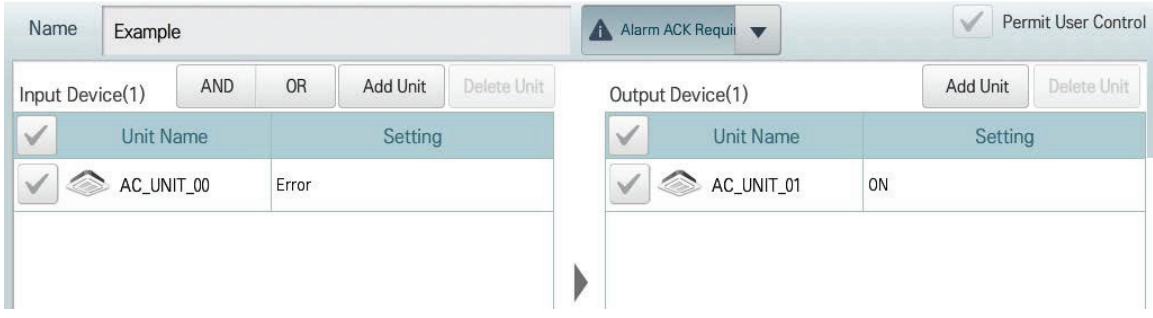

Central Controller

3.2 Functions

4) 1:1 Program

Program to set output device same to input device.

Ex)

IF Indoor unit 0's room temperature is upper 25 °C, THEN set Indoor unit 0 to turn on and cooling
IF Indoor unit 1's room temperature is upper 25 °C, THEN set Indoor unit 1 to turn on and cooling
IF Indoor unit 2's room temperature is upper 25 °C, THEN set Indoor unit 2 to turn on and cooling

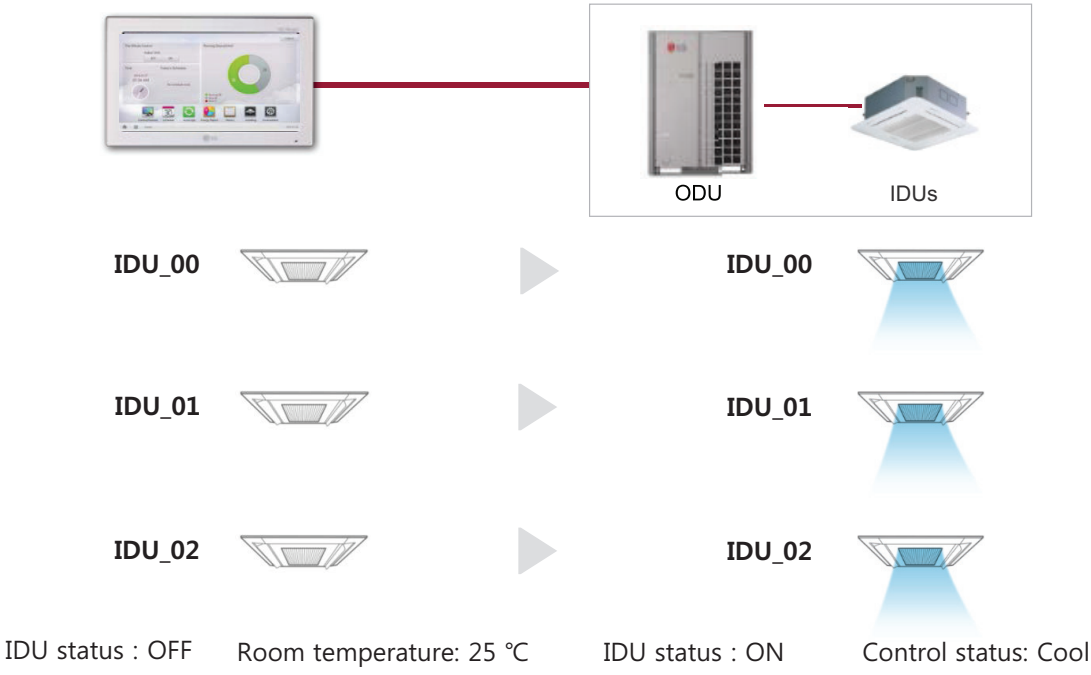

How to set)

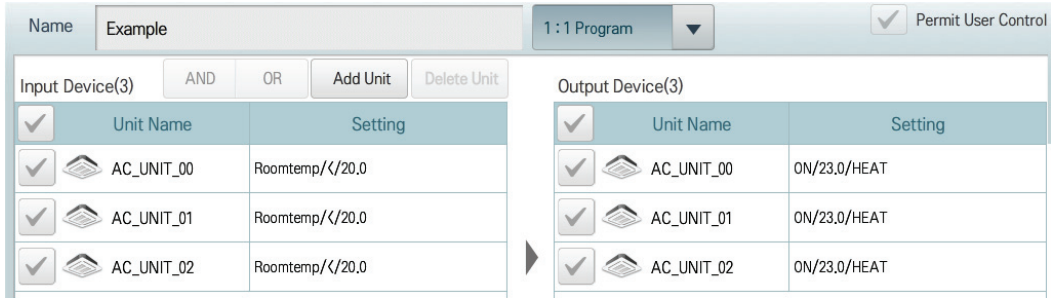

3.2 Functions

■ Map Viewing (Visual Navigation)

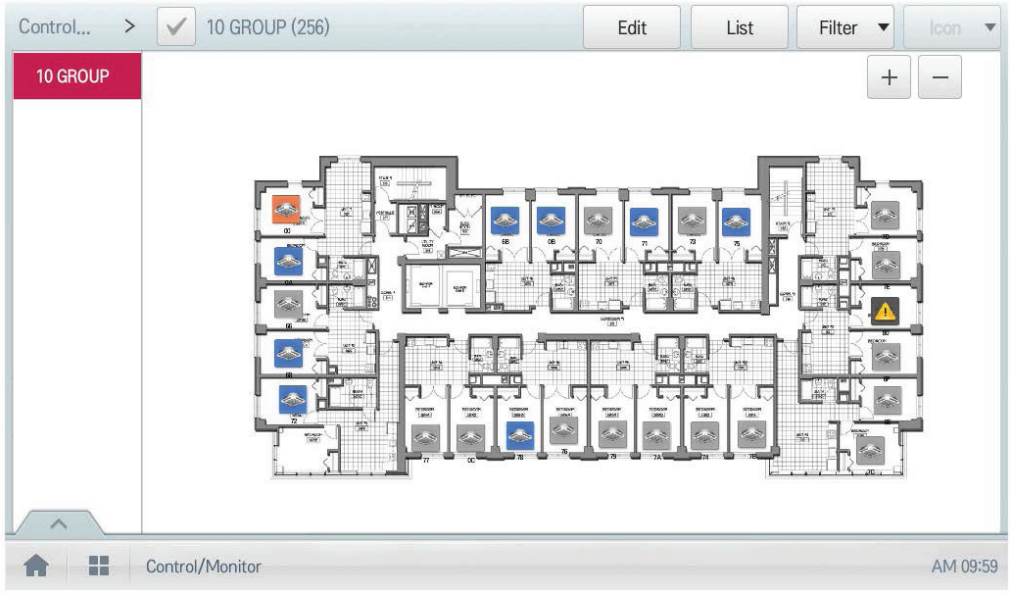

* Preparation : USB including image file of floor plan

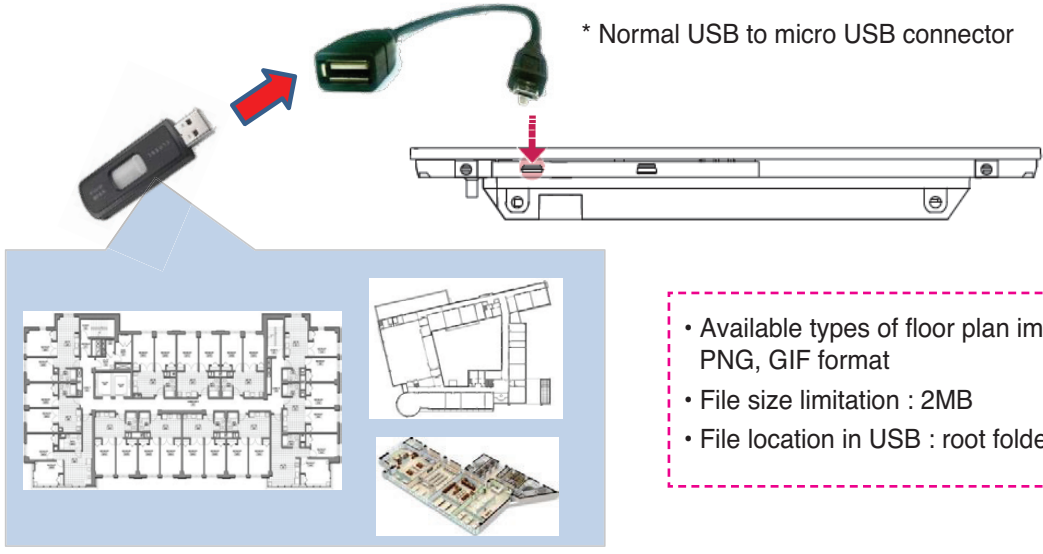

* Normal USB to micro USB connector

- Available types of floor plan image : JPG, PNG, GIF format
- File size limitation : 2MB
- File location in USB : root folder

3.2 Functions

■ Remote Access by web

Web browser supporting Flash player is required for accessing AC Smart/ACP

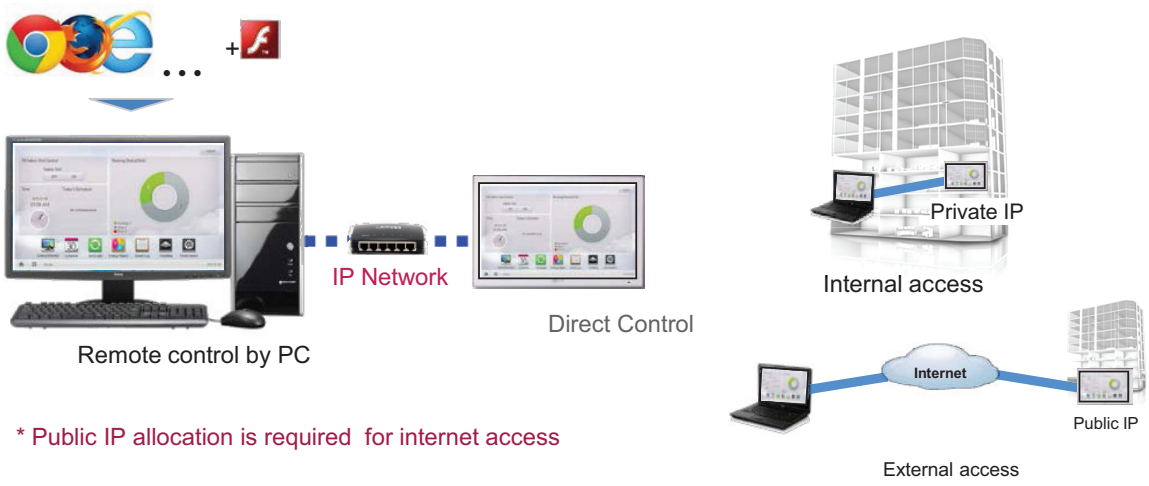

* Public IP allocation is required for internet access

• **IP Network**

For external access to central controller through internet, basically public IP network is necessary

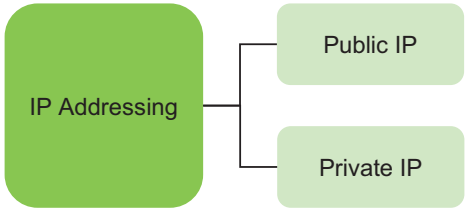

• Unique IP address that is able to be globally routed

• Cannot be transmitted directly onto the public Internet
• For internet, NAT(network address translation) device is necessary
• Commonly used for home, intranet for organization, etc

• **Private IP**

- Definition
  These addresses are characterized as private because they are not globally delegated, meaning they are not allocated to any specific organization, and IP packets addressed by them cannot be transmitted onto the public Internet.

- Private IP address spaces (IPv4)

RFC1918 name	IP address range	number of addresses	*classful* description	largest CIDR block (subnet mask)	host id size
24-bit block	10.0.0.0 – 10.255.255.255	16,777,216	single class A	10.0.0.0/8 (255.0.0.0)	24 bits
20-bit block	172.16.0.0 – 172.31.255.255	1,048,576	16 contiguous class Bs	172.16.0.0/12 (255.240.0.0)	20 bits
16-bit block	192.168.0.0 – 192.168.255.255	65,536	256 contiguous class Cs	192.168.0.0/16 (255.255.0.0)	16 bits

NOTES

IP address/Subnet mask/Gateway is activated when IP address allocation type is Using Static IP address.

3.2 Functions

TCP Port Used to access AC Smart/ACP : 80, 9300

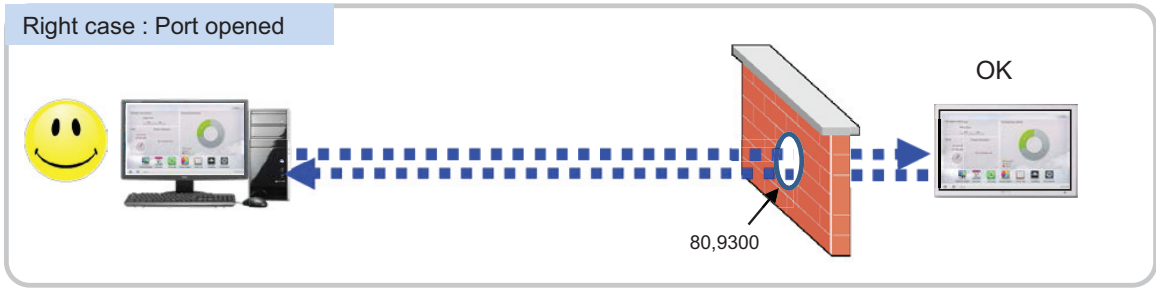

3.2 Functions

■ Cycle Monitoring

For Outdoor unit : Master/slave outdoor unit information is displayed.

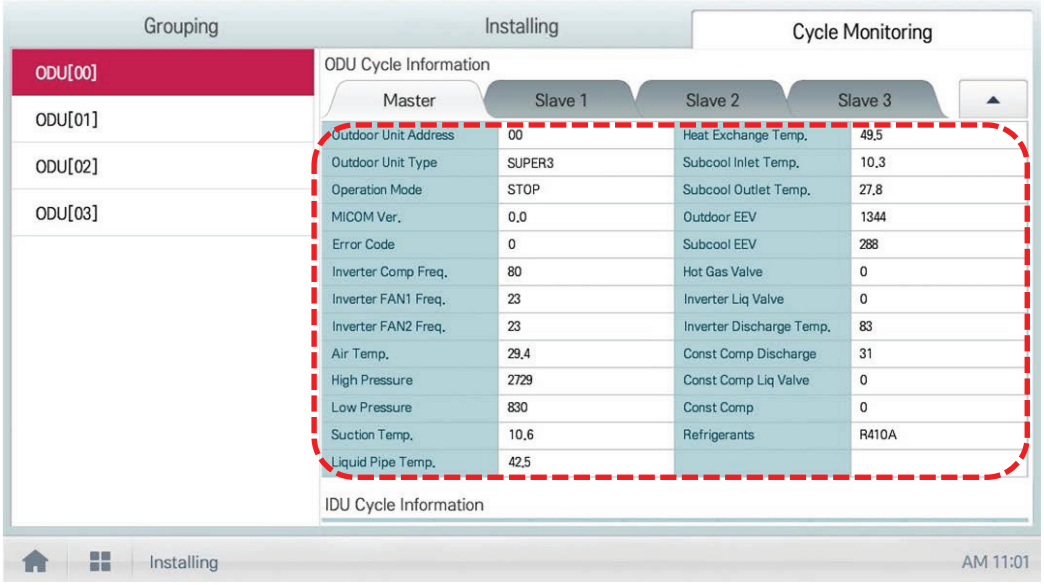

For Indoor unit : Information on all indoor units connected to the outdoor unit is displayed

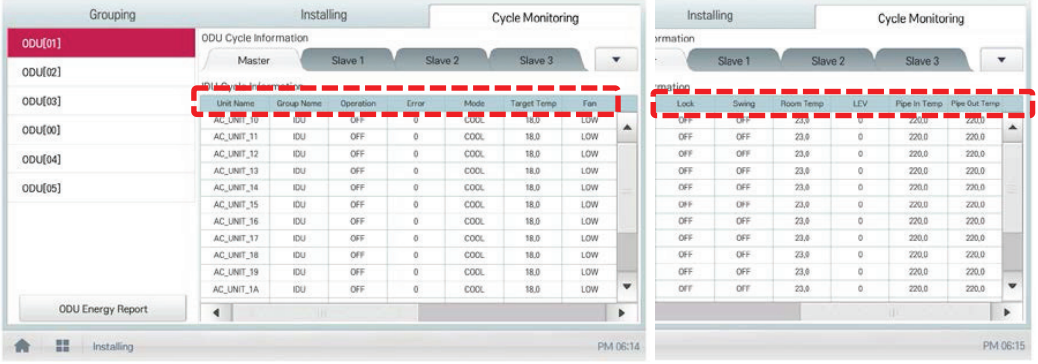

NOTES

Some categories of the corresponding menu may not be displayed or menu name may be different according to the function of the product.

NOTES

A central control address value is a number between 00 and FF. You can use only 1 device per address.

3.3 Example of installing

■ BUS wiring

• BUS wiring is required for LGAP communication

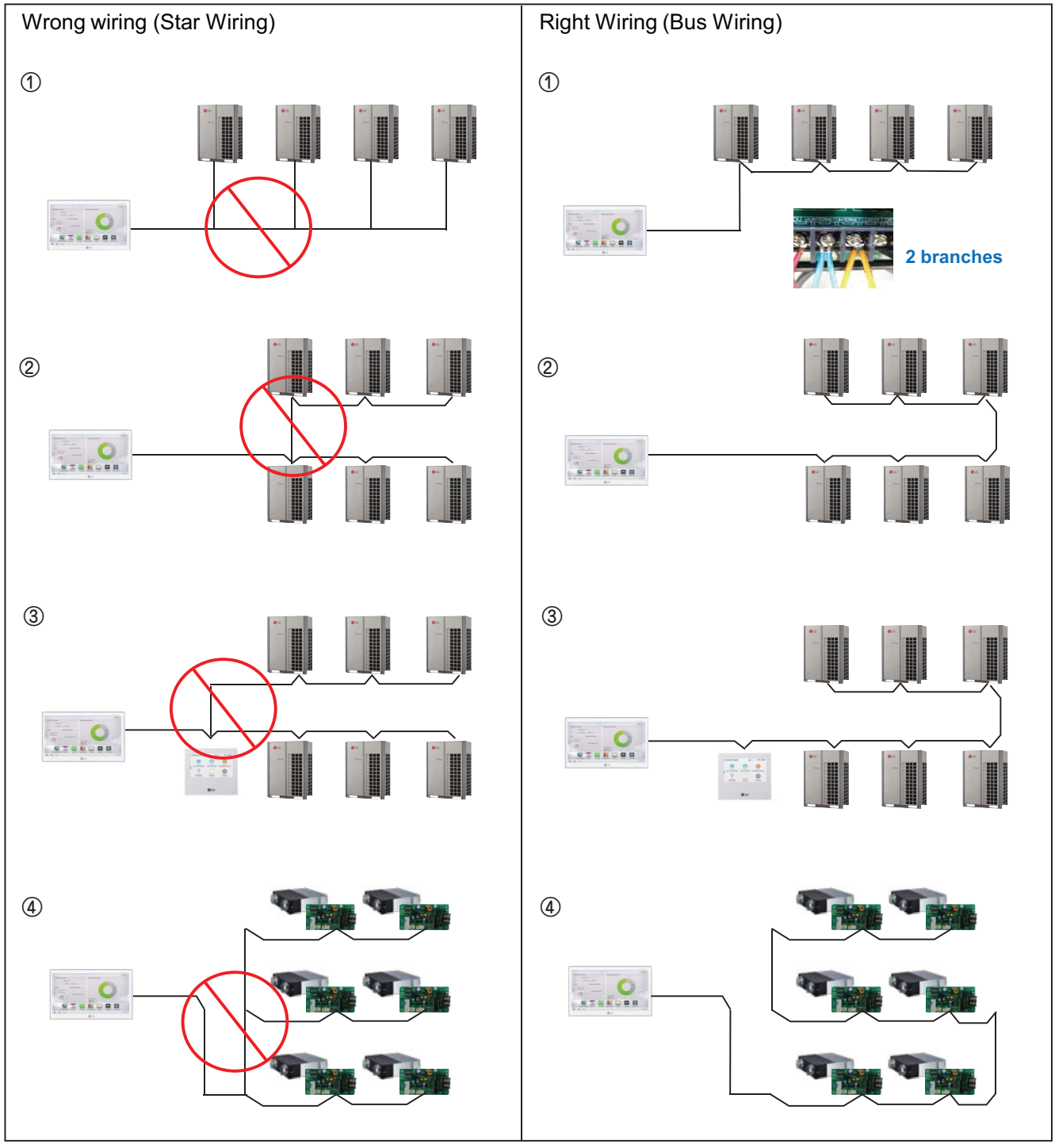

3.3 Example of installing

■ 485 Communication Port

- BUS wiring is required for LGAP communication
- Checking disconnection/short/polarity of cable
- PI485 G/W Setting for Multi/Single & ERV

Multi V

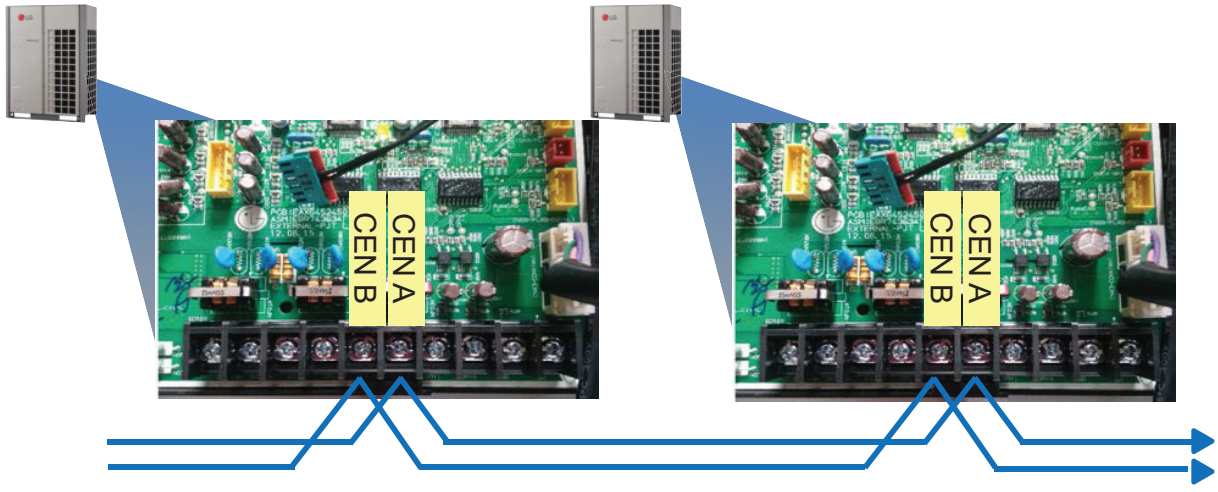

Multi/Single(ODU connection type)

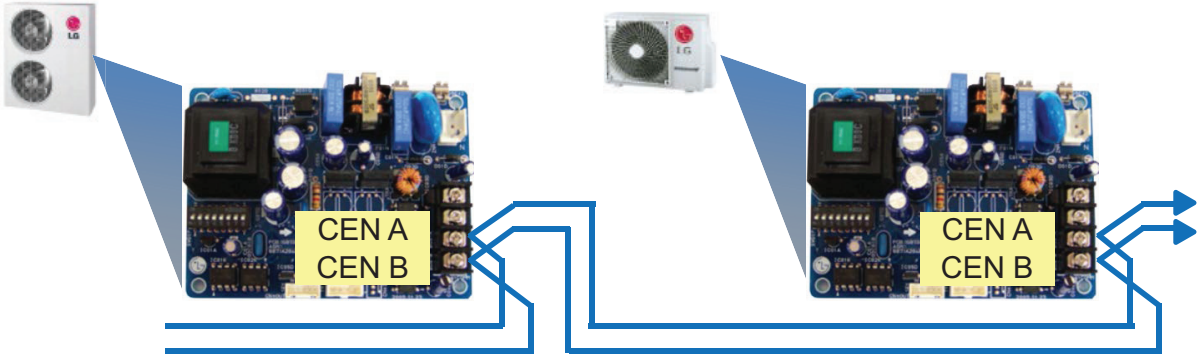

ERV/Single(IDU connection type)

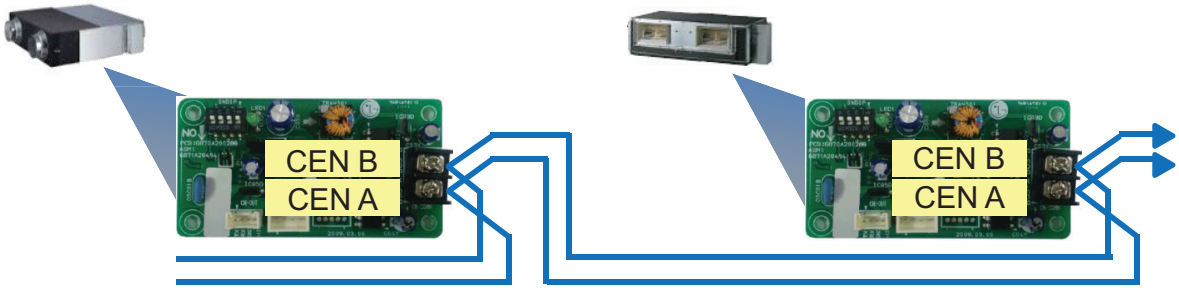

3.3 Example of installing

■ Comm. wiring case - AC Ez + AC Ez

Wrong wiring

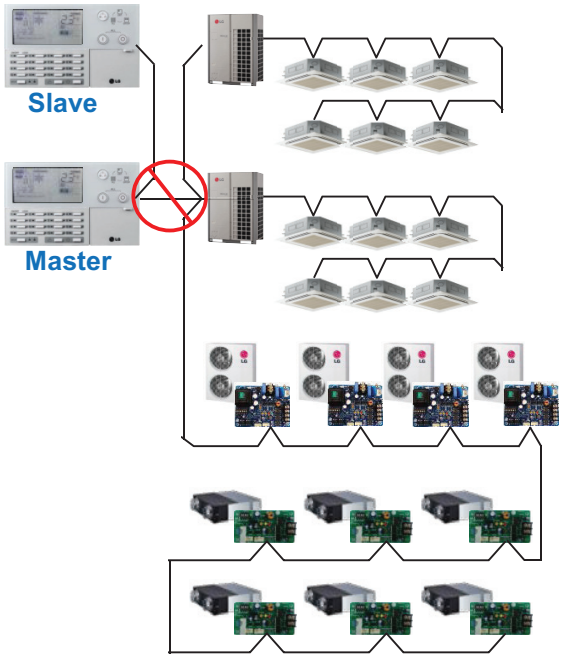

Right Wiring

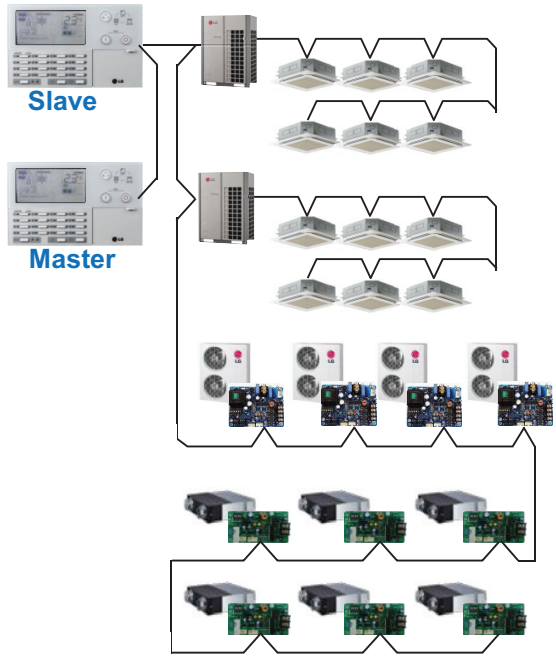

■ Installation case - AC Smart IV with AHU

Wrong wiring

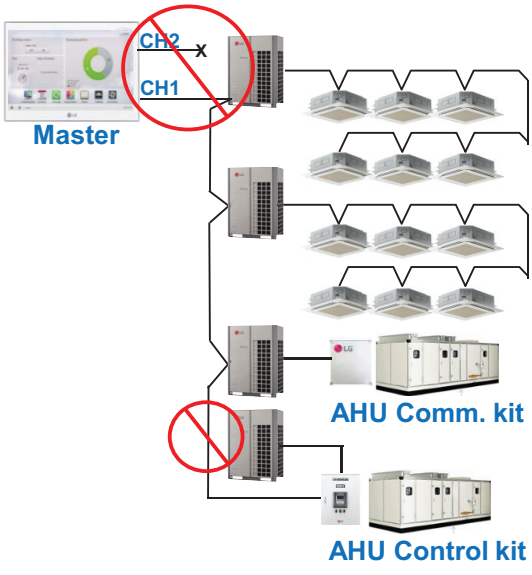

Right Wiring

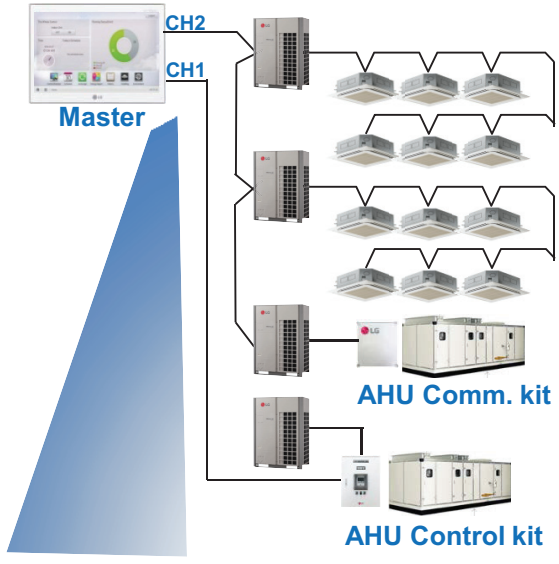

- CH1 : LGAP(AHU) or Modbus(AHU, Chiller, ACS I/O)
- CH2 : IDU, ERV, DX ERV, Hydro kit

3.3 Example of installing

■ Installation case - AC Manager IV + ACP IV + ACS I/O

Wrong wiring

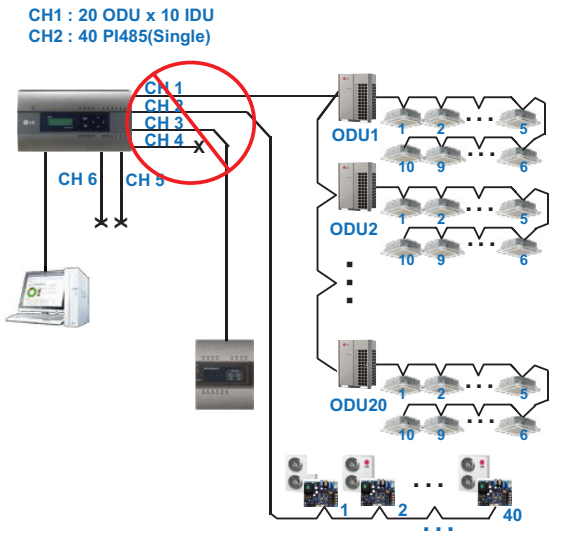

- As the number of ACS I/O modulesincreases, the number of controllable units decreases.

Right Wiring

- ❖ Up to 16 Multi V per CH
- ❖ Up to 32 PI485 per CH

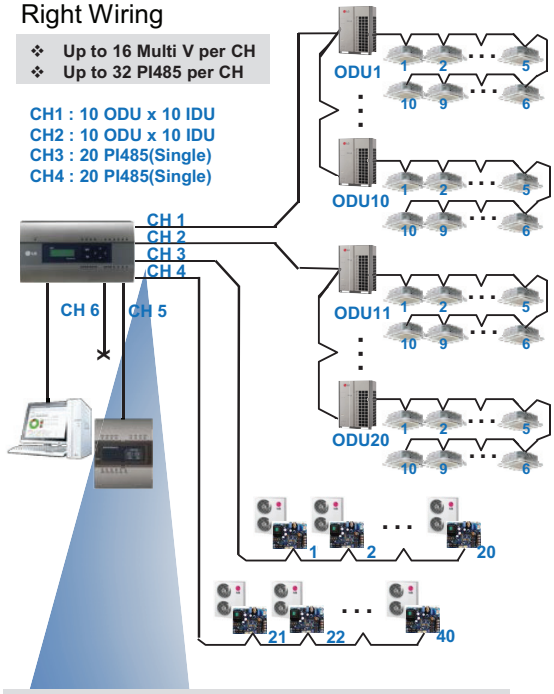

- CH1~4 : IDU, ERV, DX ERV, Hydro kit
- CH5 : LGAP(AHU) or Modbus(AHU, Chiller, ACS I/O)
- CH6 : Modbus(AHU, Chiller, ACS I/O)

■ Installation case - AC Manager 5 + ACP IV + ACS I/O

Wrong wiring

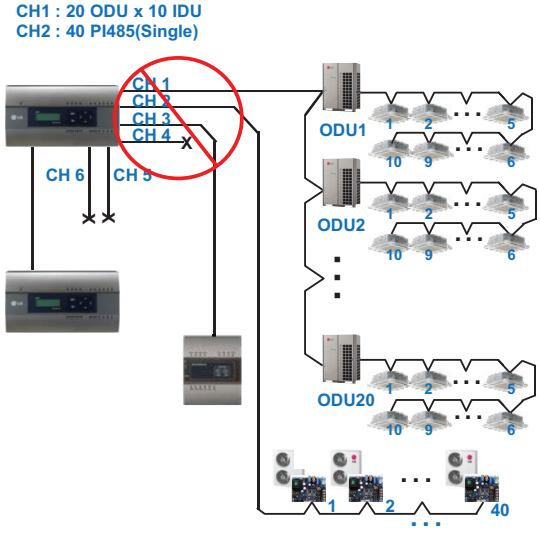

- As the number of ACS I/O modules increases, the number of controllable units decreases.

Right Wiring

- ❖ Up to 16 Multi V per CH
- ❖ Up to 32 PI485 per CH

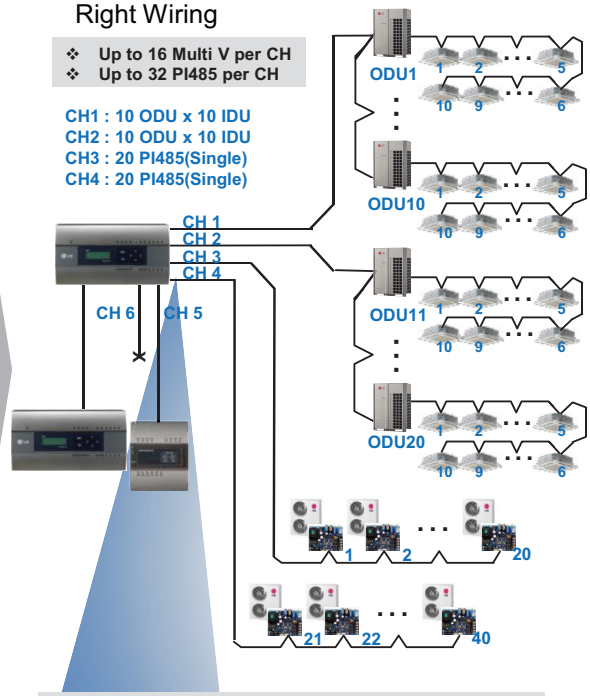

- CH1~4 : IDU, ERV, DX ERV, Hydro kit
- CH5 : LGAP(AHU) or Modbus(AHU, Chiller, ACS I/O)
- CH6 : Modbus(AHU, Chiller, ACS I/O)

3.3 Example of installing

■ Installation case - ACP IV + PDI + PDI

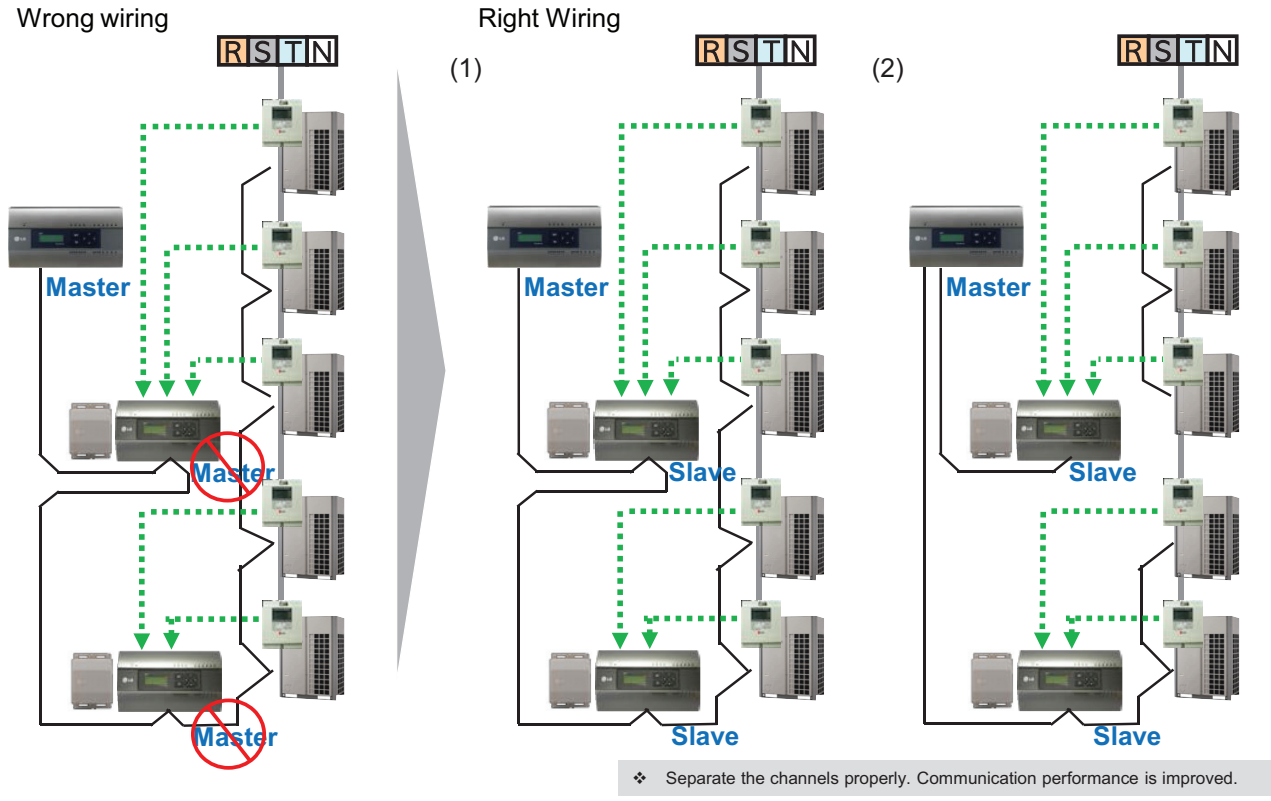

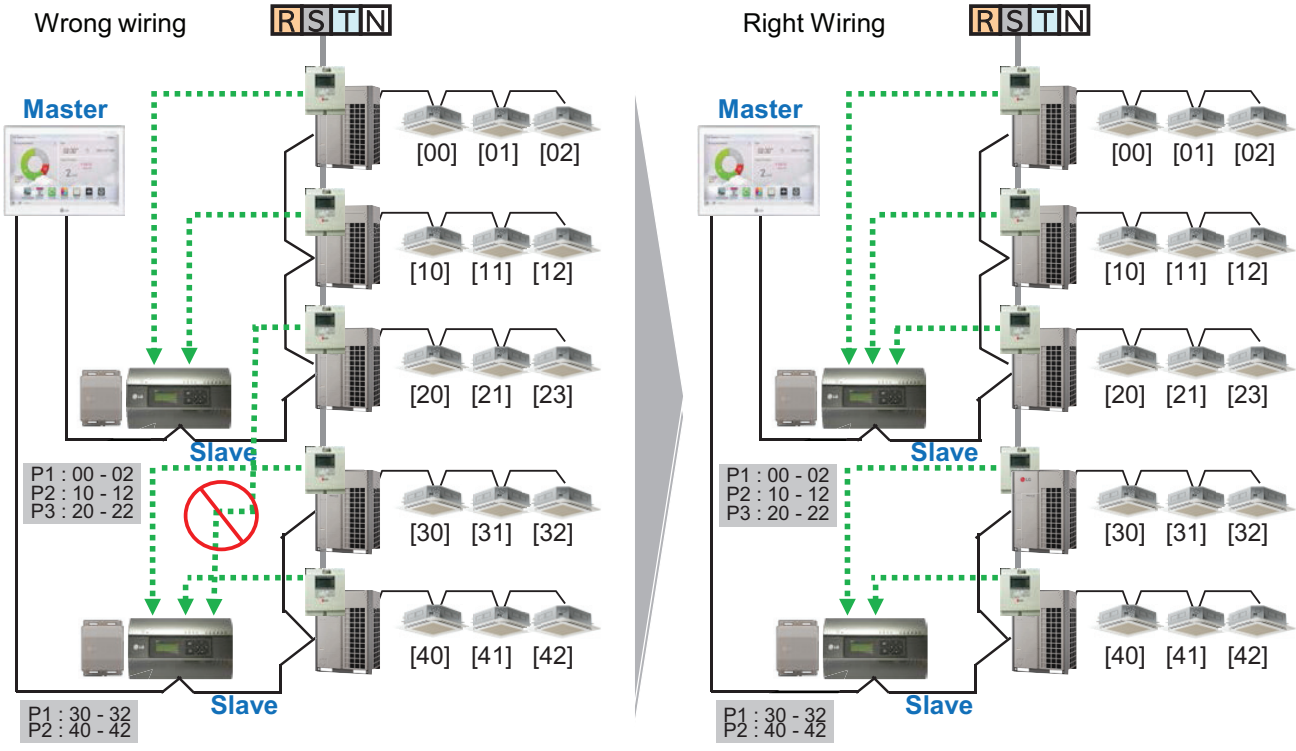

3.3 Example of installing

■ Installation case - BMS + ACP BACnet GW + PDI

Wrong wiring

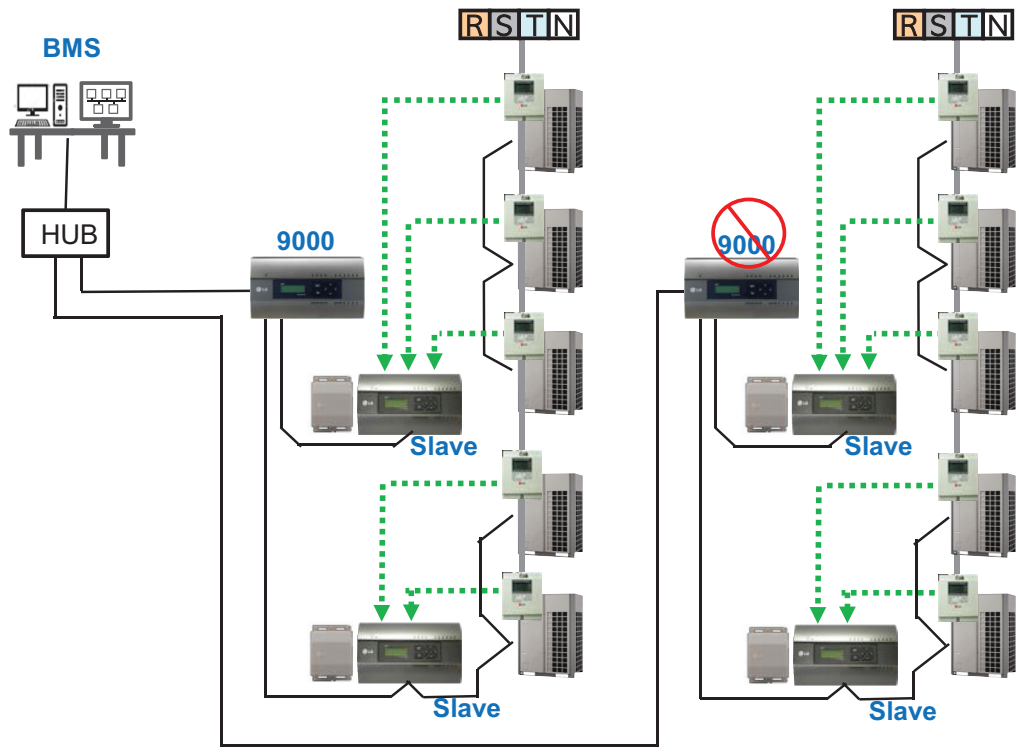

Right Wiring

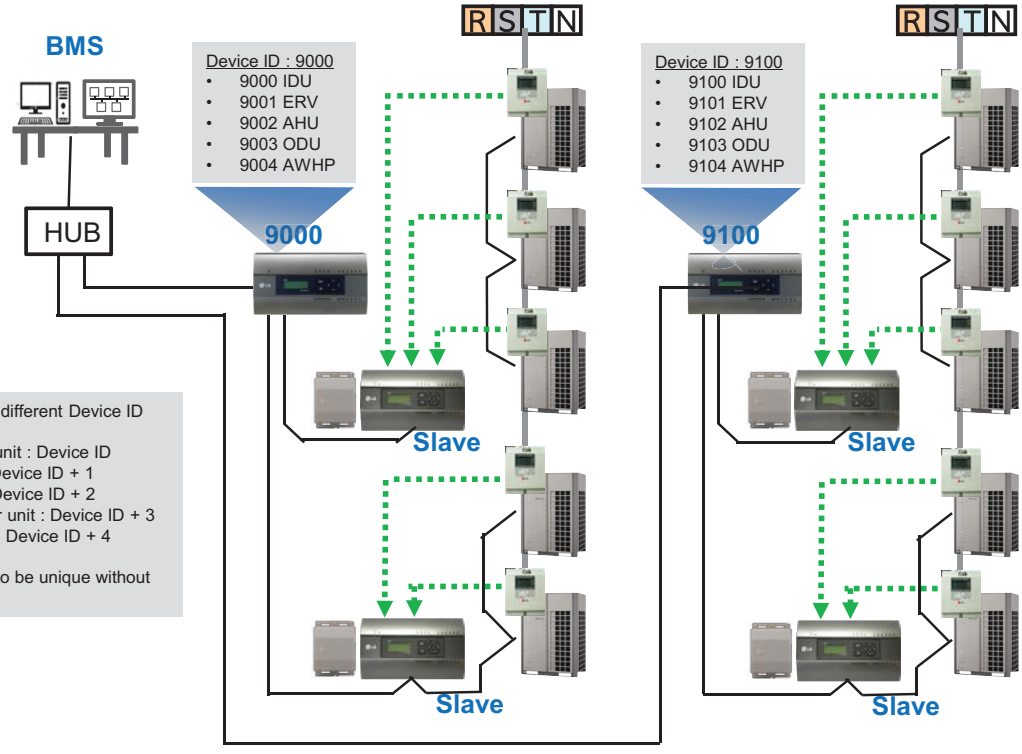

- ❖ Each Unit type has different Device ID (Default 9000)
  - Indoor unit : Device ID
  - ERV : Device ID + 1
  - AHU : Device ID + 2
  - Outdoor unit : Device ID + 3
  - AWHP : Device ID + 4
- ❖ Change Device ID to be unique without duplication.

3.4 Product Description

3.4.1 AC Ez

- Model name : PQCSZ250S0

- Apart from On/Off control, operation mode, fan speed, scheduling, additional functions can be displayed and easily controlled.
- Mode control, temperature control etc and monitoring of up to 32 units (Indoor unit & ERV) is possible by Group/Unit.
- Linked control is possible total 8 AC Ez controller can be connected together.
  (Max 256 indoor units can ne controlled in same time)
- Schedule(8 events per day) function is possible by Group/Unit.

3.4.1.1 Specifications & Dimensions

■ Features

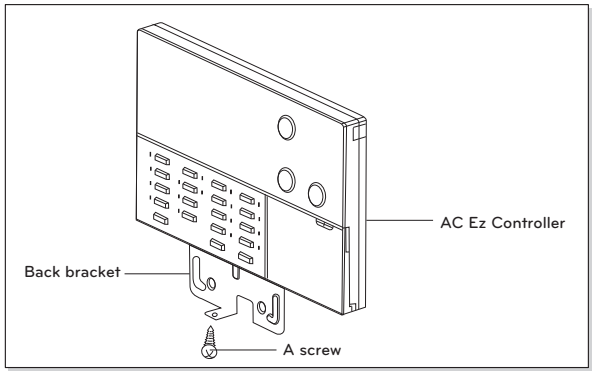

■ Accessory

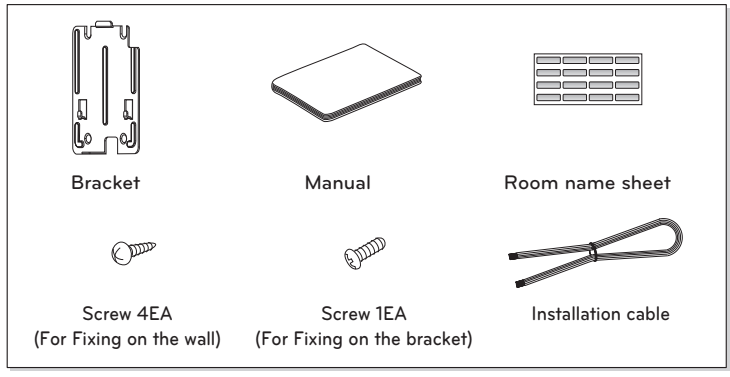

■ Product Specifications

Categories	Specifications
Max. Indoor unit to control	32 indoor units
Individual Control	On,Off / Operation Mode / Fan Speed / Temp. Control
Lock function	Central
Mode change	Cooling / Heating / Fan / Dehumidifications / Auto
Schedule	8 event schedule / day
Ventilation control	On,Off / Ventilation Mode / Fan Speed
Display (All Indoor status indication)	Operation / Set Temp. / Room Temp. / Schedule
Dimensions (mm)	190 x 120 x 17
Power Source	12 V⎓, 1A

3.4 Product Description

■ Dimensions

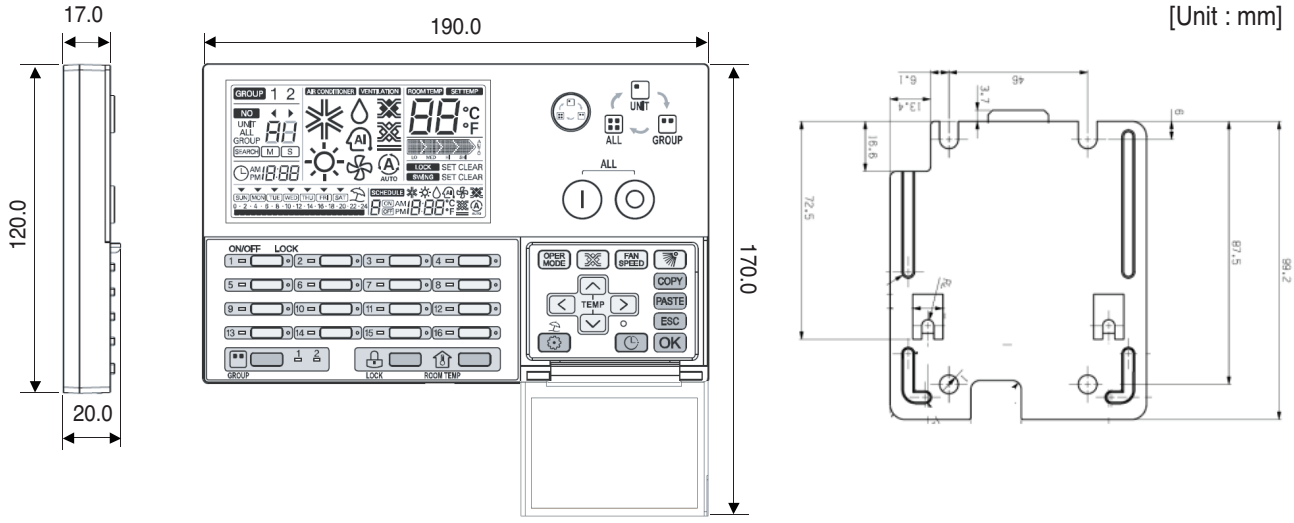

3.4.1.2 Function

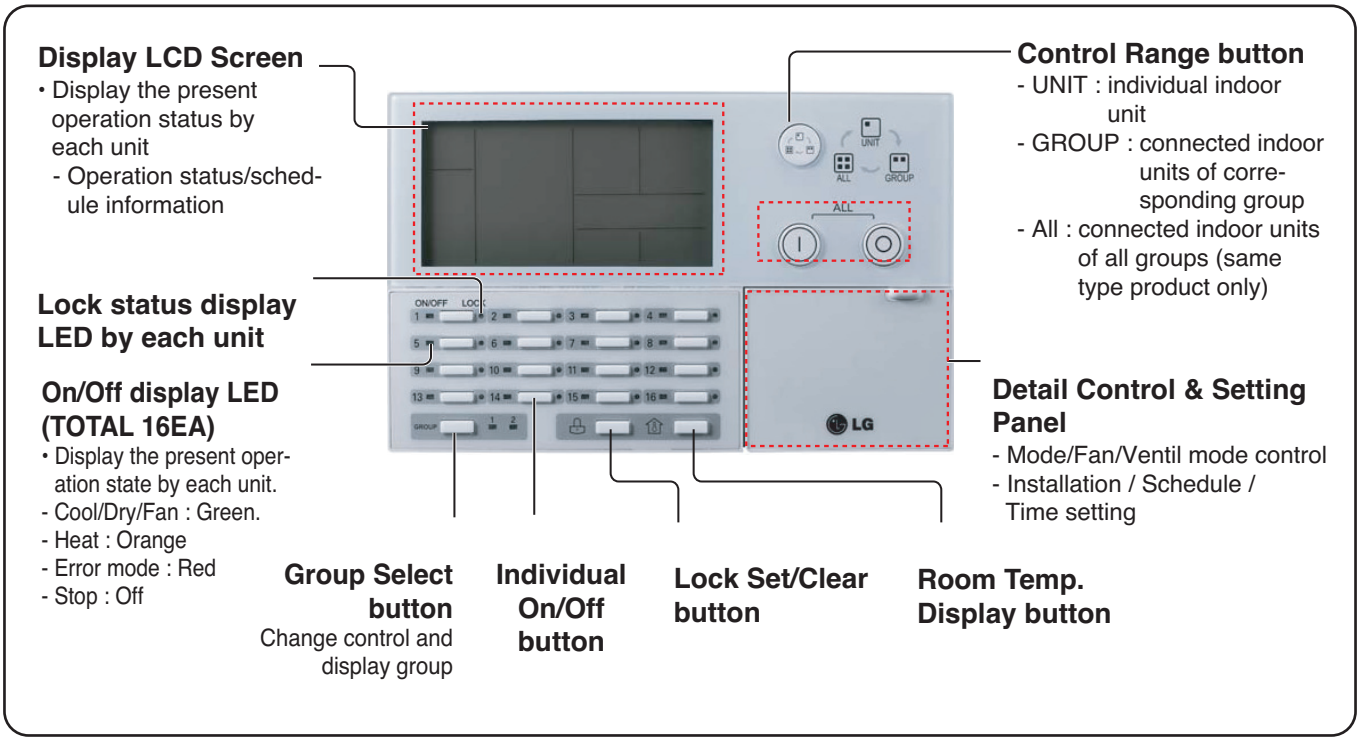

3.4 Product Description

Control panel	Display screen	Description
UNIT ALL GROUP	NO UNIT ALL GROUP 88	**Control select button** : Adjusts selected indoor unit range.
ALL		**Total On/Off button** : Turns the power on/off condition of selected indoor units.
1		**Individual On/Off button** : Turns the power on/off condition of individual indoor unit.
GROUP 1 2	GROUP 1 2	**Group selection button** : Change control and display group
LOCK	LOCK SET CLEAR	**Lock set/clear button** : Turns the lock set/clear
ROOM TEMP	ROOM TEMP SET TEMP 88 °C °F	**Room temperature button** : Display the room temperature
OPER MODE		**Operation mode button** : Change operation mode of air conditioner
	AUTO	**Ventilation mode button** : Change ventilation mode of ventilator
FAN SPEED	LO MED HI SHI	**Fan speed button** : Change fan speed
	SWING SET CLEAR	**Air flow button** : Turns swing set/clear of air flow
TEMP	ROOM TEMP SET TEMP 88 °C °F	**Set temperature button** : Change desired operation temperature of air conditioner
	NO UNIT ALL GROUP 88	**Indoor select button** : Select desired indoor unit to control
		Function setting button : Enter installation mode to installation setup
	AM PM 88:88	**Current time setting button** : Setup the current time
	SCHEDULE ON OFF AM PM 88:88 °C °F AUTO	**Schedule setting button** : Enter the schedule setup mode to setup desired schedule
COPY		**Schedule copy button** : Copy former set schedule
PASTE		**Schedule paste button** : Paste copied schedule
ESC		**Esc button** : Cancel the changed content
OK		**OK button** : Setup the changed content
		Holiday setting button : Turns holiday schedule application set/clear

3.4.1.3 Field Wiring Diagram

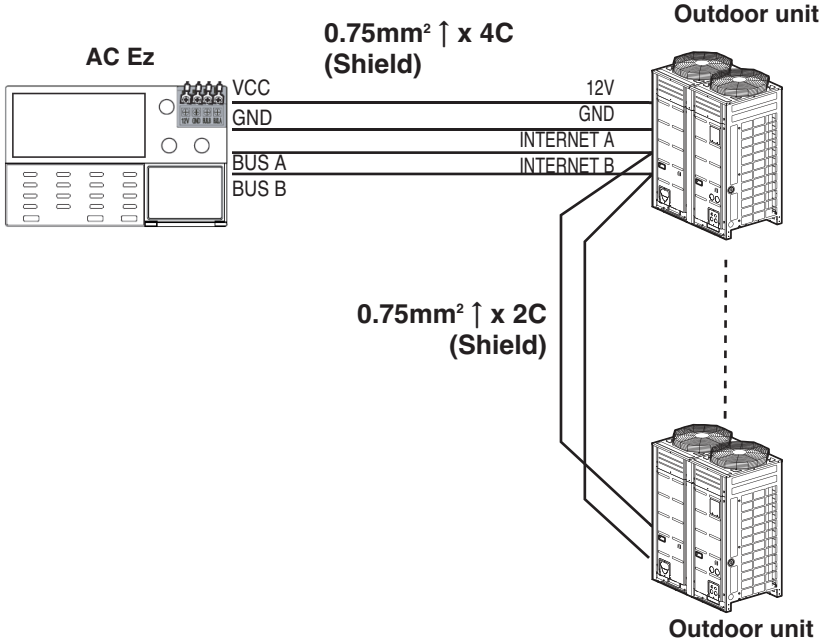

- 32 indoor units at maximum can be connected to one AC Ez.
- When there are many outdoor units to connect, connect the outdoor units with the BUS form.
  Otherwise, the simple central controller may cause the malfunction.
- The following figure shows the example for connecting with the BUS form.

■ **One AC Ez Connection**

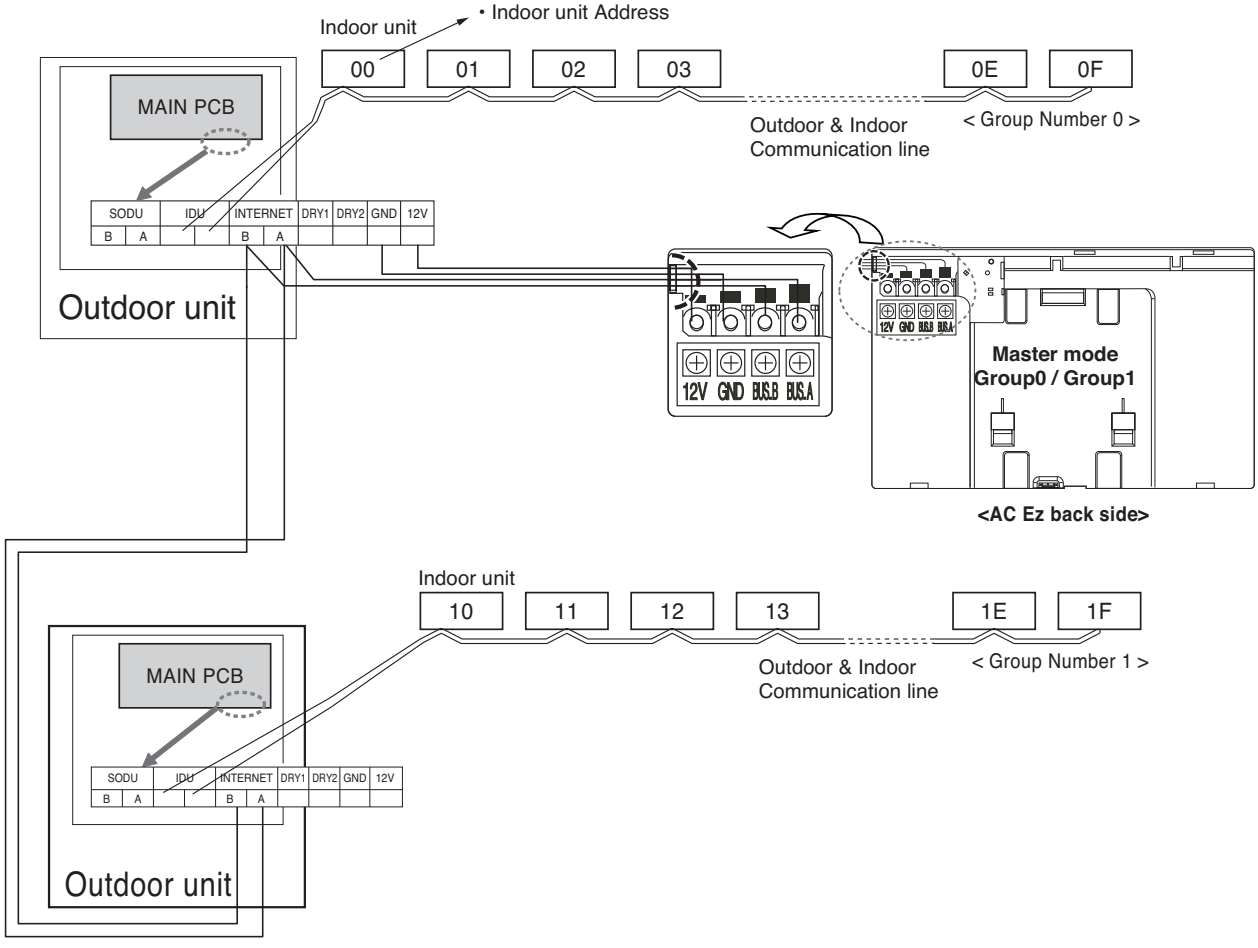

3.4 Product Description

■ 2 or more AC Ez Connection

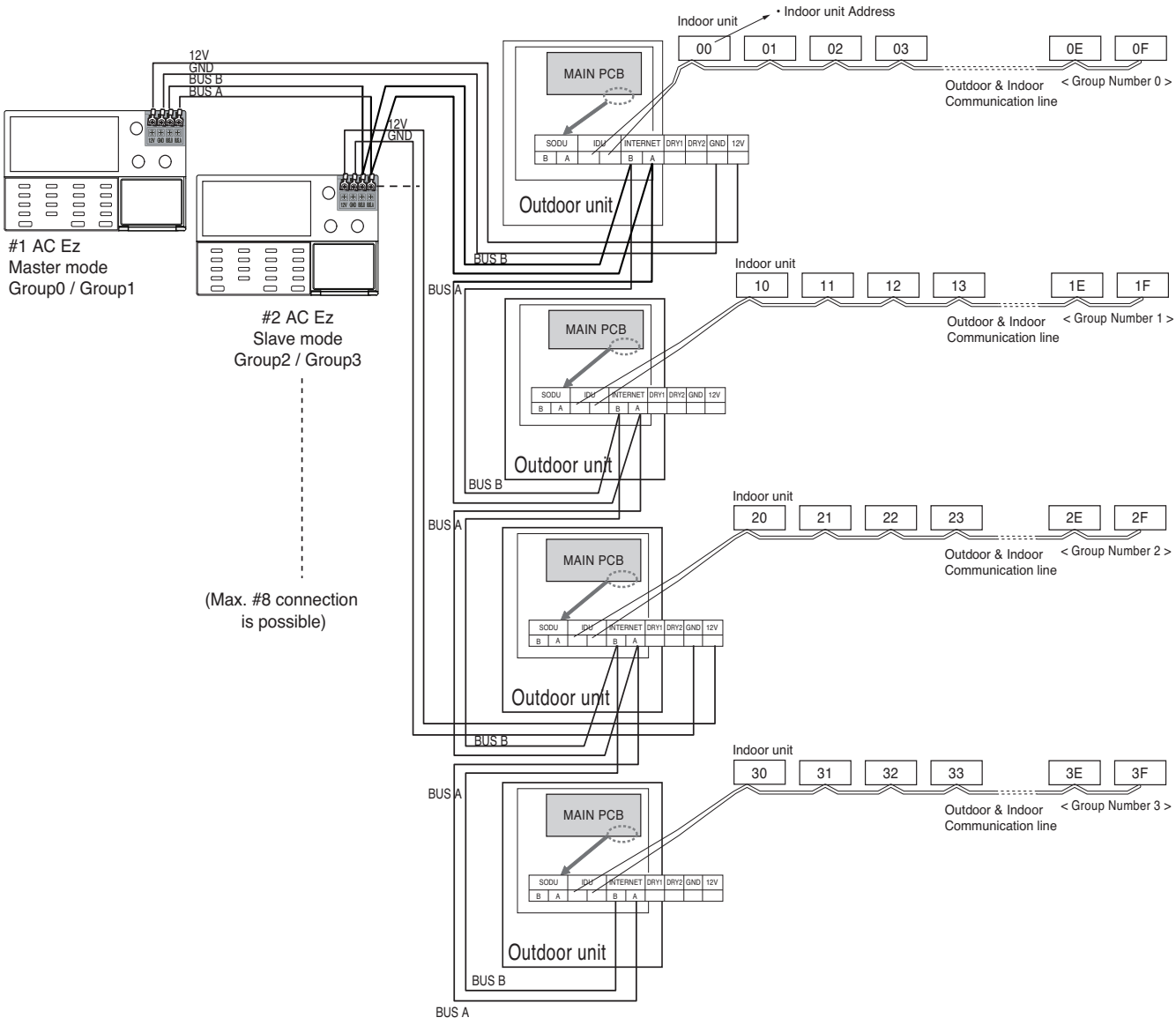

3.4 Product Description

Installer Setting Code Table

No.	Function	Code	Value
1	Master/Slave Setting	1	M : Master S : Slave
2	Group 1 product Select	2	Air conditioner / Ventilator
	Group Number Setting		0~F : Group Address - : No use of this group
3	Group 2 product Select	3	Air conditioner / Ventilator
	Group No. Setting		0~F : Group Address - : No use of this group
4	Indoor units searching (Master controller only)	4	Indoor unit searching
5	°C / °F setting	5	°C : Celsius
			°F : Fahrenheit

NOTE

In each installation mode, if you press the OK button, it is operated or saved current setting condition.
If you press the ESC button, it is returned before setting condition and exits from installation mode.

Item		Control	Schedule
Air conditioner	ON/OFF	O	O
	Operation mode	O	O
	Set temp	O	O
	Fan speed	O	-
	Swing	O	-
	Lock	O	-
Ventilation (ERV/ERV DX)	ON/OFF	O	O
	Mode	O	O
	Co-Air conditioner	O	O
	Set temp	O	O
	Fan speed	O	-
	Lock	O	-

3.4 Product Description

Schedule display

By setting schedule day, it indicates schedule overview of the day and executed next schedule time as same as following figure.

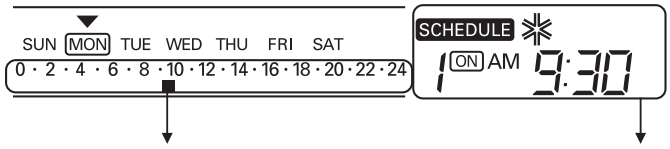

<Schedule overview of the day> <Schedule details of executed next schedule>

Schedule Priority

If two more schedules are setup at the same time, it operates higher priority schedule. Lower number schedule has higher priority.

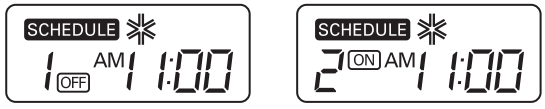

Ex) In case of the same schedule time of schedule 1 and 2, as the schedule time of schedule 1 has higher priority than schedule 2, corresponding indoor unit will stop the operation at AM 11:00.

Schedule caution

During executing schedule(s), Indoor units doesn't take any other command for several minutes (Remote controller and AC Ez may not operate normally during this period.)

During the Blackout

1 If a blackout lasts longer than 2 hours, the already set schedule will not be executed after the blackout. (The current time must be set again.)
2 During the blackout, the set schedule will not be executed.

3.4 Product Description

Flow chart for Installer setup mode

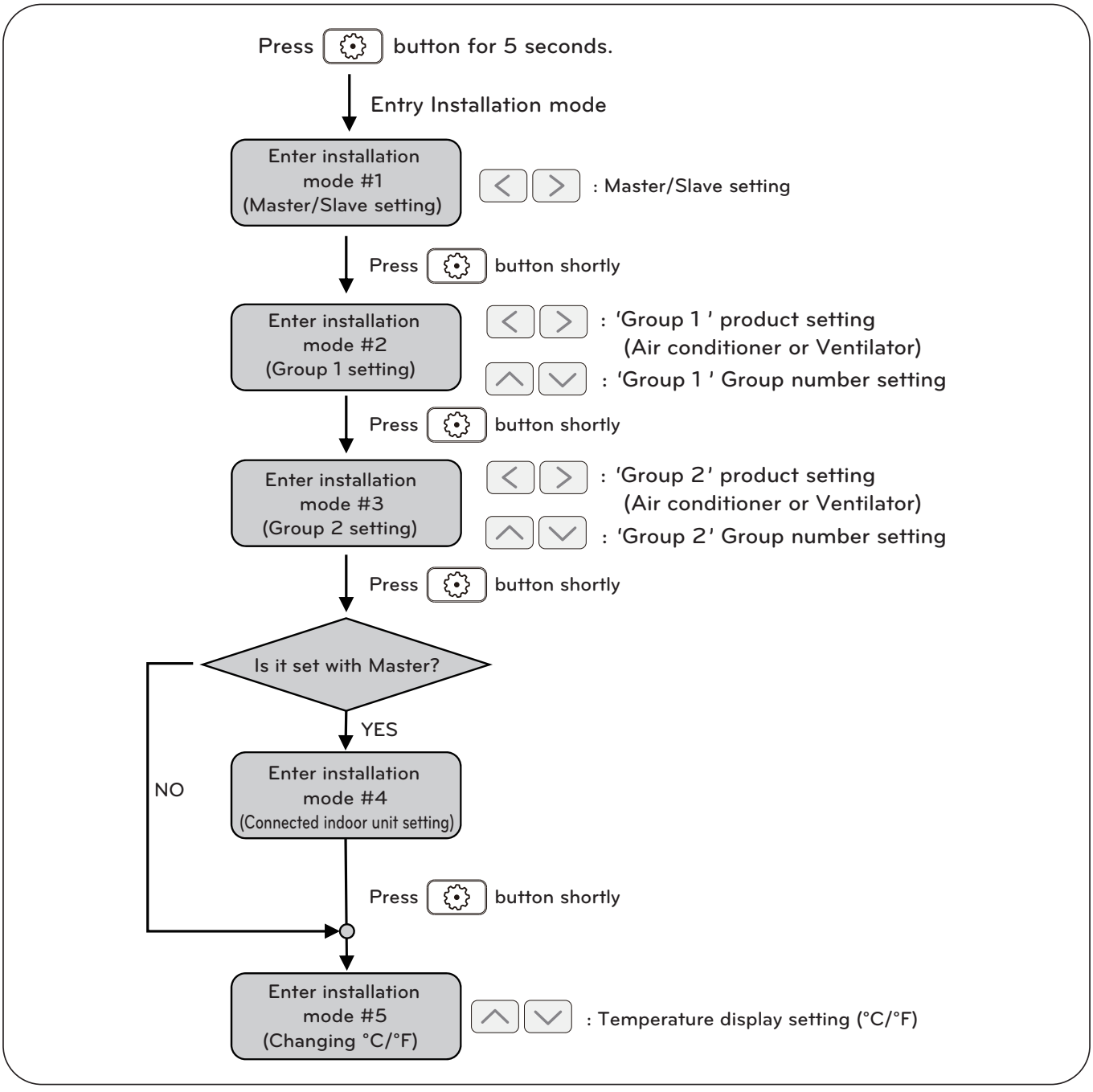

NOTE

In each installation mode, if you press the OK button, it is operated or saved current setting condition.
If you press the ESC button, it is returned before setting condition and exits from installation mode.

3.4 Product Description

Flow chart for schedule setting

• **Schedule setting**

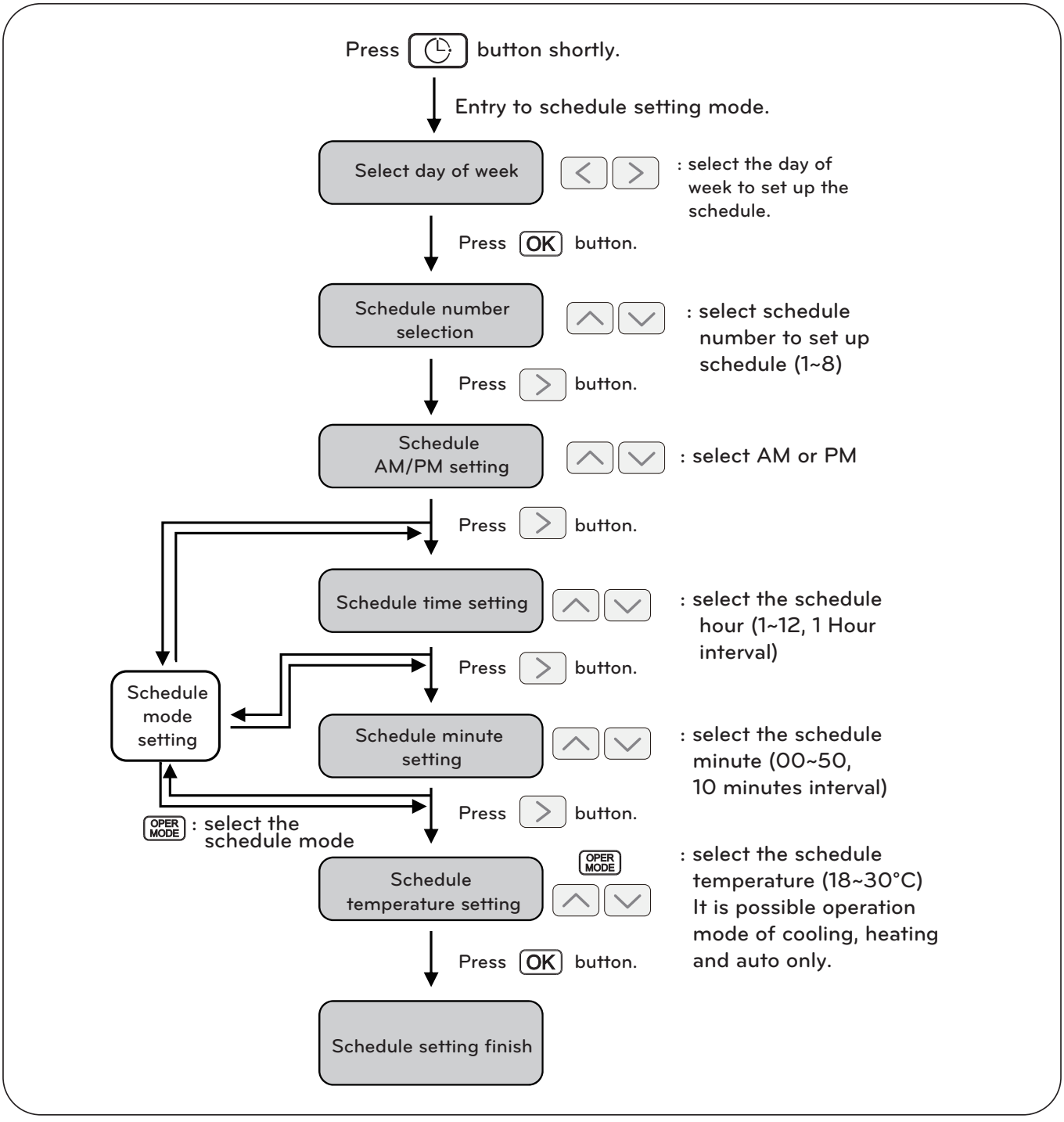

NOTE

• If you press ESC button, the schedule setting condition is changed back to previously configured condition and it exits from schedule setting mode.

3.4.2 AC Ez Touch

- Model name : PACEZA000

- AC Ez Touch is a central controller installed in the management with 5 inch TFT LCD and touch screen for small site.
- Mode control, temperature control etc and monitoring of up to 64 units (Indoor unit, ERV & Hydro kit) is possible by Group/Unit.

3.4.2.1 Specifications & Dimensions

■ Features

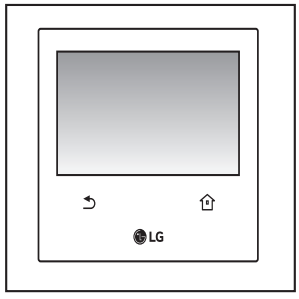

■ Accessory

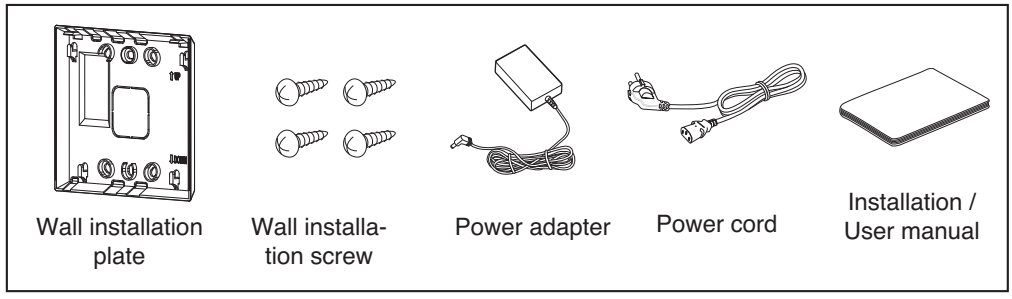

■ Product Specifications

Item	Specification	Etc
Power	12 V⎓ (Adapter)	-
MCU	ARM® Cortex™-A8 600MHZ 324P TI	-
RAM	DDR3 2GBIT(128MX16)	-
Flash	2GBIT (256X8)	-
LCD	5 inch color LCD (800 * 480)	-
Touch	C-Type Touch Panel	-
LAN	1Port	100 Mbps
DI/DO	DI 1EA	Max 100 m Dry contact (N/O) For Emergency
RS485	1EA	Max 1 km
Keyboard	Korean/English/Number	-
Size(mm)	137 * 121 * 25	-
OS	Linux	-
IP rating	IP20	-

NOTE

Product specifications may be different depending on the S/W version.

3.4 Product Description

■ Dimensions

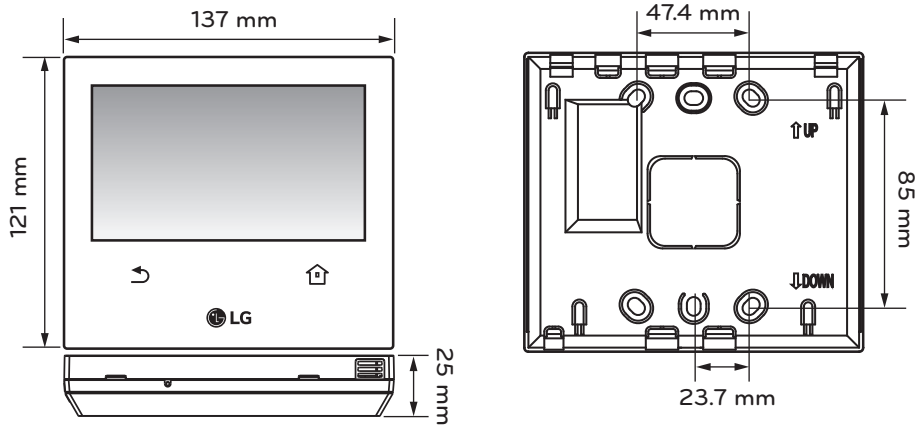

3.4.2.2 Field Wiring Diagram

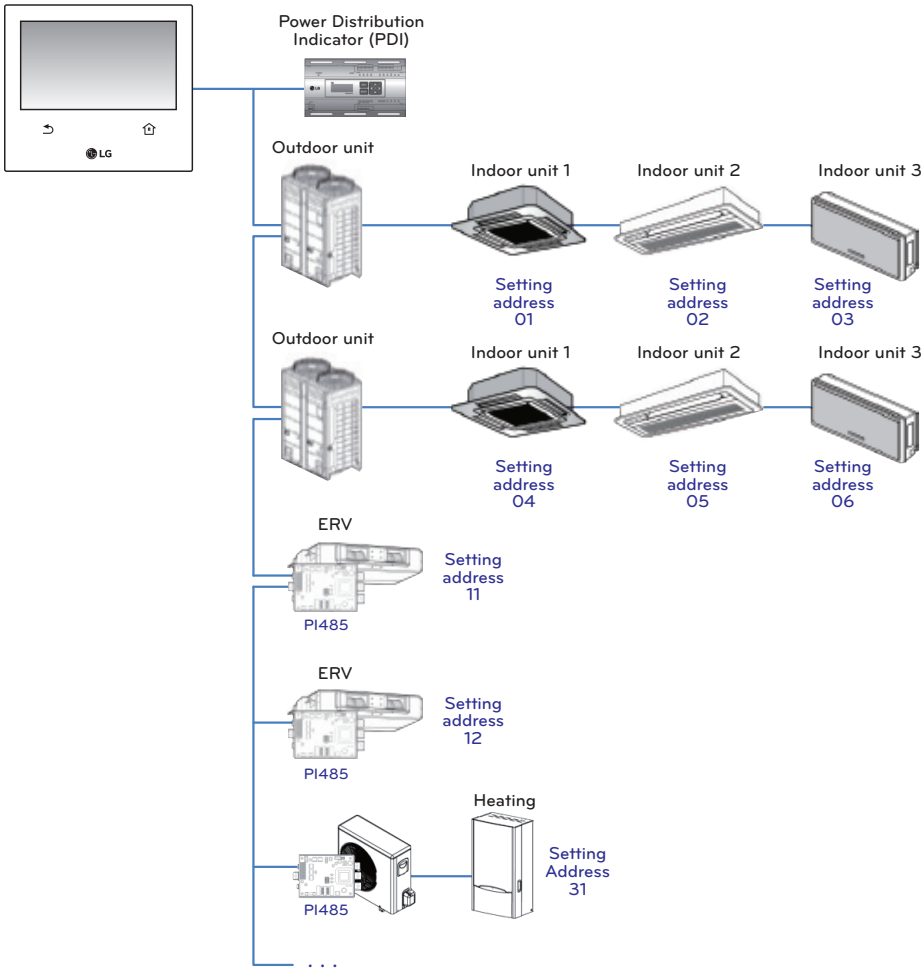

3.4.2.3 Function

■ Access rights for each menu

User	Menu
General User	Aircon control, Vent control, Heating Control, Schedule, Report
Manager & Install	Aircon control, Vent control, Heating Control, Schedule, Report, Setting

NOTE

Manager and installer: When it enters the setting, the manger and installer are verified by password.

■ Menu screen

• In case of the menu screen, the location of the menu changes according to the connected product.

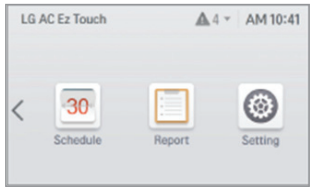

<Empty device>

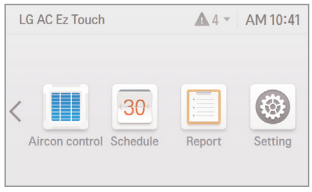

<In case when Only air conditioner is connected>

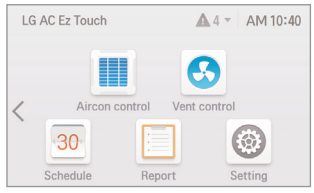

<When air conditioner and ventilation are connected>

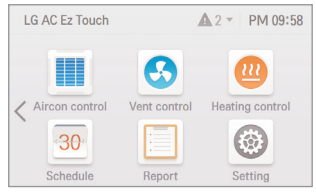

< When air conditioner, ventilation, System boiler are connected>

■ Control screen

Item	Description
Group	On state(Yellow), Off state(Gray)
Individual Air conditioner	Cool(blue), Heat(orange), Fan(green), Dry(dark blue), Auto(purple), Off(Gray)
Individual Ventilation(ERV/ERV DX)	Normal(blue), HEX(orange), Auto(purple), Off(Gray)
- Individual Heating device	Cool(blue), Heat(orange), Auto(purple), Off(Gray)

3.4 Product Description

■ Product specification

Product		AC	ERV	DX ERV
Mode		Heat, Cool, Dry, Fan, Auto	Heat exchange, Normal, Auto	Heat exchange, Normal, Auto
Fan speed		Low, Mid, High, Auto	Very High, High, Low, Auto	Very High, High, Low, Auto
Swing		Auto, Cancel	-	-
Lock	Entire	All	All	All
	Individual	Temperature, Mode, Fan speed	-	-
Temperature setting		18~30°C	-	18~30°C
		Upper: 16~30°C Lower: 18~30°C	-	-
Humidifier setting		-	-	-
Additional function		Function to cancel filter alarm	Power save, Quick, Heater	Power save, Quick, Heater, Humidifier
Air Conditioner		-	-	Cool, Heat, Auto, Off

Product		System boiler			
		System boiler	Heating only	Hydrokit	Cascade
Mode		Heat, Cool, Auto	Heat, Auto	Heat, Cool, Auto	Heat, Auto
Lock	Entire	O	O	O	O
	Individual	X	X	X	X
Hot water		O	O	O	O
Set tem-perature	Room temp	Cool(16~30°C) Heat(16~30°C)	Heat(16~30°C)	Cool(18~30°C) Heat(16~30°C)	Heat(16~30°C)
	Outlet water temp	Cool(6~25°C) Heat(20~55°C)	Heat(15~80°C)	Cool(6~25°C) Heat(20~50°C)	Heat(30~80°C)
	Inlet water temp	30~80°C	30~80°C	30~50°C	30~80°C
Etc		-	-	Hot water + Heating + Cooling	Hot water+Heating

3.4 Product Description

■ Max character

Item	Max character(alphabet/numeric)
Group name	20
Schedule name	50
Indoor unit name	20
Controller of AC Ez Touch name	20
Password	6~16

NOTE

Allowed special character are . (period) and – (hyphen)

■ Schedule

Item	Description
Maximum schedule number	200
Schedule control setting information	Name, date, time, repeat setting, device, control command

■ Report

Item		Description
Reported information		Error, filter / oil change alarm, energy
Error	Report error history	Supporting view each error report of Air conditioner/Ventilation/Heating
	Maximum error history storage count	5000
	Maximum error checkable period	1 year
	Error history contents	Date / time / device name / error code / message
Change alarm	Report error history	Supporting view each alarm(filter/oil change) report
	Maximum alarm history storage count	5000
	Maximum alarm history checkable period	1 year
	Alarm history contents	date / time / device name / message
Energy	Report energy history	Supporting power consumption of group / individual equipment.
	Maximum energy history che'ckable period	4 month
	Energy history contents	Group name(Indoor unit name)/power consumption/accumulated power consumption

3.4 Product Description

■ Energy save mode

The air conditioner energy save mode is turned on, and it repeats the operation state change control in sequence according to the set energy save mode cycle.

[Energy save mode OFF]

[Energy save mode ON]

When [Energy save mode] icon in the Air conditioner control screen is pressed, the energy save mode becomes on.

When the energy save mode is on, the [Energy save mode] icon is lighted in green, and the operation state change control is repeated according to the setting of energy save mode cycle.

❊ Energy save mode operates the air conditioner only.
- In cooling operation: Cool ↔ Fan, lock all
- In heating operation: Heat ↔ OFF, lock all

• Setting : time setting(5min / 10min / 15min)

Ex) Set 15 min

Normal

Energy save modeON

After 15 min

NOTE

In slave state, you cannot use each equipment's lock setting, set temp range, 2set point, IDU 2set, auto search device function, energy report and energy save mode.

3.4 Product Description

■ Network setting

In this screen, you can save or change the network setting information to use when you wish to connect to ethernet.

1) IP address setting

- IP address setting methods are using DHCP to get IP address and designating IP address.

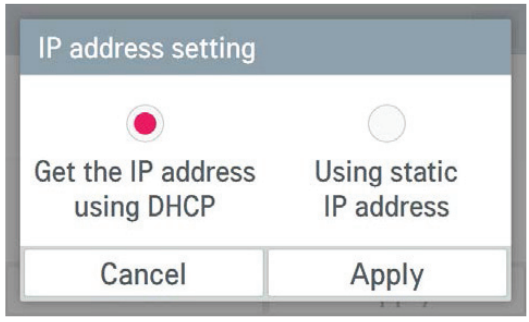

- Get the IP address using DHCP : You can use DHCP to automatically set dynamic IP in the currently connected internet network. (If it is DHCP, IP information setting category is deactivated.)

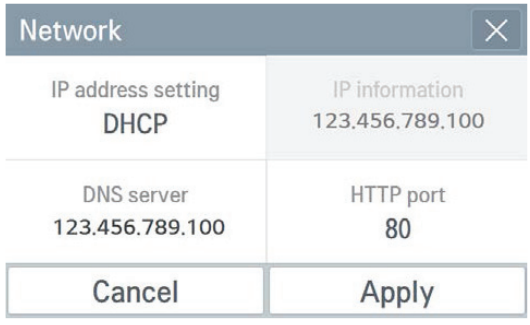

- Using static IP address : You can set the network using the user input IP information. If you select the IP address designation, IP information is activated, and you can input the IP information.

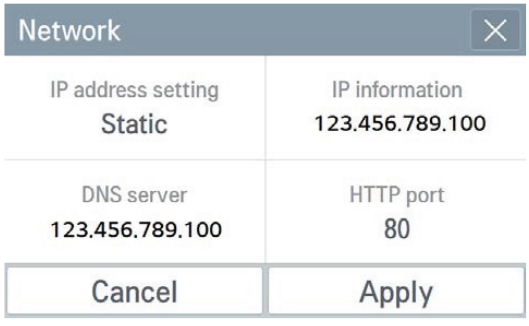

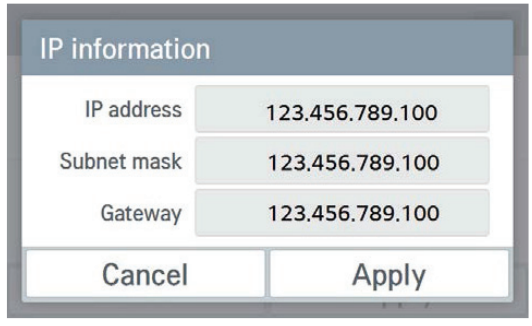

3.4 Product Description

2) DNS server designation. You can set main DNS / sub DNS address

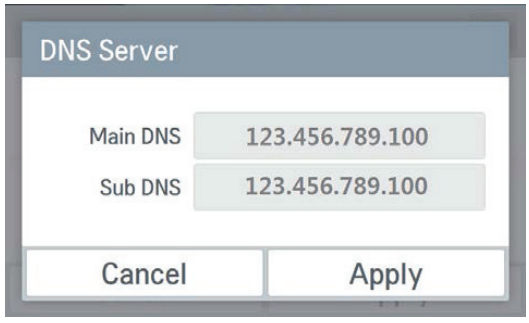

3) HTTP port designation
You can change HTTP port setting information for the ethernet connection (for service).
User can freely set HTTP port according to the network environment. (Input boundary is 1~65535.)

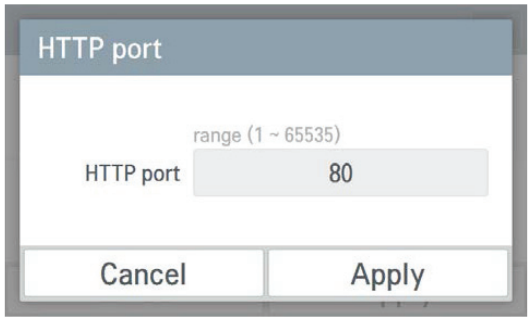

3.4 Product Description

■ PC Access

It supports the function that you can control and monitor connected devices via the web application.

Requirements

Hardware	
CPU	Dual core 2.4GHz or more
Main memory	4GB or more
Hard disk	At least 1GB of free space on the disk
Main OS	Windows XP/7/8/8.1/10 (32/64bits)

1. Set the IP in the network setting screen

2. Connect by entering the IP set in the web browser. Click the download link.

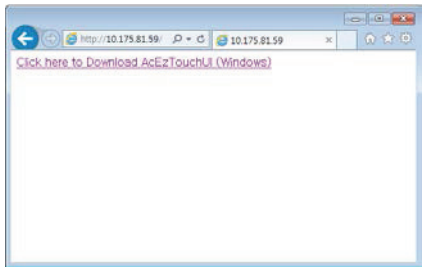

3. Install the program

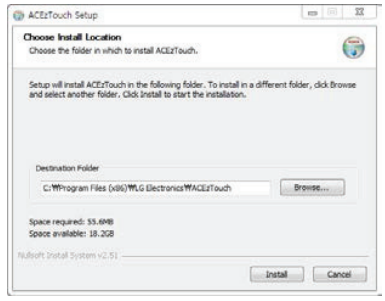

4. Run the installed program.

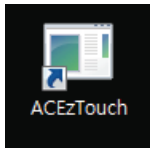

5. Enter the Name and IP Click on the “Set up” button.(Enter the name after ‘ACEzTouch_’)

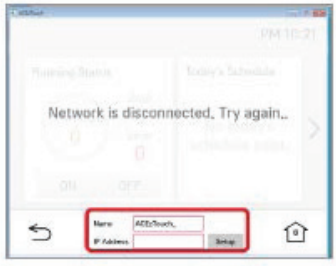

6. Connected.

3.4 Product Description

■ Language setting

GUI

Supporting Korean, English, Italian, Spanish, Portuguese, Russian, French, German, Turkish, Polish, Chinese.

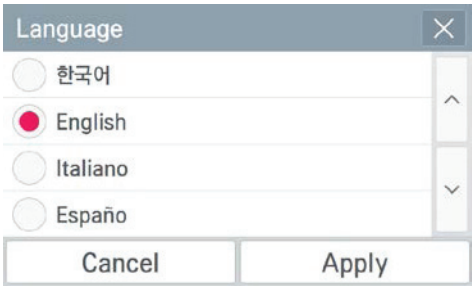

Keyboard
Korean/English/Number

■ In case of wrong password input

1) In case of wrong password input, it displays the phrase saying that the password input is wrong as follows.
2) In case of 5 repeated wrong password input, it verifies whether to initialize the password. When you press [Cancel] button, the password input screen appears again.
3) For the password initialization, please contact the installation store or service center.

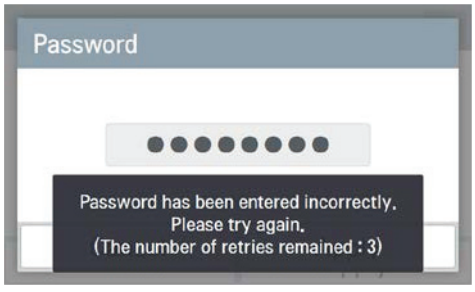

<In case of wrong password input>

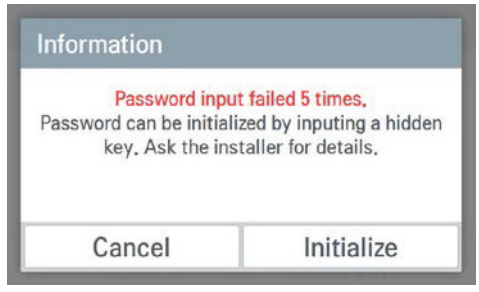

<In case of 5 repeated wrong password input>

3.4 Product Description

■ Product specification

			AC Smart IV	ACP IV	ACP BACnet	ACP Lonworks
Max character	Group name		50			
	Schedule name		50			
	Indoor unit name		20			
	Controller name		50			
	Password		20			
Schedule	Maximum schedule number		200			
	Schedule period setting		Time, period, repeat program, select day			
	Schedule control command		Operating, operation mode, desired temperature, fan speed, swing, lock, limit temperature, auto change over, temperature limit (based on indoor unit)			
Event log	Log contents		Operating, operation mode, desired temperature, error code, controller			
	Error	Supportable of error log	O			
		Maximum number of storable error log	You can query up to 200 events and email/save to PC, USB memory up to 300 events. Up to 5000 events are stored total.			
		Maximum period to get error log	3 month from the start date			
		Error log contents	Error code			
	Control	Supportable of control log	O			
		Maximum number of storable control log	You can query up to 200 events and email/save to PC, USB memory up to 300 events. Up to 5000 events are stored total.			
		Maximum period to get control log	3 month from the start date			
		Control log contents	Operating, operation mode, desired temperature, controller			
Energy Report	Power	Supportable of power history	O			
		Maximum period to get power history	2 year			6 month
		Power history contents	Daily usage, Monthly usage and accumulated usage by each group or individual equipment			
	Gas	Supportable of gas history	O			
		Maximum period to get gas history	2 year			6 month
		Gas history contents	Daily usage, Monthly usage and accumulated usage by each group or individual equipment			
	Run time	Supportable of run time history	O			
		Maximum period to get run time history	1 year			5 month
		Run time history contents	Daily and Monthly usage by each group or individual equipment			

3.4 Product Description

			AC Smart IV	ACP IV	ACP BACnet	ACP Lonworks
Auto control	Peak control	Priority	0~100% (1% degree)			
		Outdoor unit capacity	9 step (0, 40, 45, 50, 60, 70, 80, 90, 100) %			
	Demand control	Priority	0~100% (1% degree)			
		Outdoor unit capacity	9 step (0, 40, 45, 50, 60, 70, 80, 90, 100) %			
	Time limit	Maximum group number	40			
		Setting time	30 min, 1 hour, 2 hour, 3 hour, 4 hour			
		Supporting device	Indoor unit, ventilator, Direct Expansion Ventilator, System boiler, AHU			
	Device interlocking	Maximum pattern number	40			
		Pattern type	General pattern, copy pattern, emergency pattern, 1:1 program			
		Supporting device	Indoor unit, ventilator, Direct Expansion Ventilator, System boiler, AHU, Chiller, ACS I/O, DOKIT			Indoor unit, ventilator, Direct Expansion Ventilator, System boiler, AHU, ACS I/O, DOKIT
		Input condition	Operating, error status, operation mode, fan speed, swing, room temperature (based on indoor unit)			
		Output condition	Operating, set temperature, operation mode, fan speed, swing (based on indoor unit)			
Energy management	Energy navigation	Supporting	O			X
		Graph	Daily usage, Monthly usage, Period+Predicted usage amount, Monthly target excess rate, usage in the previous year, yearly target amount			
		Excess standard	Predicted usage amount/Actual usage amount			
		Control level	7 levels			
		Control type	indoor unit operation rate, outdoor unit capacity control, indoor unit operation control			
		Control type setting	Auto/Manual			

3.4.3 AC Smart IV

- Model name : PACS4B000

- AC Smart IV is a central controller installed in the management office of a building, or in the administration office of a school, to monitor and operate, via touch screen or Web access, the indoor units, ERV (ERV: Energy Recovery Ventilator, ERV DX: Direct Expansion Energy Recovery Ventilator), DI/DOs, DOKITs, AWHPs, AHUs and I/O Modules installed inside the building.
- AC Smart IV can manage, collectively or individually, the indoor units, ERV, DI/DOs, DOKITs, AWHPs and AHUs for up to 128 devices. (Or the indoor units, ERV, DI/DOs, DOKITs, AWHPs and AHUs for up to 64 devices and 9 I/O Modules)

3.4.3.1 Specifications & Dimensions

■ Features

AC Smart IV

■ Accessory

AC Smart IV User's Guide

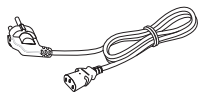

Power Cord

Power Adapter

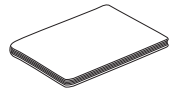

Installation / User manual

■ Product Specifications

Item	Specifications
CPU	PCIMX5150D • ARM Cortex A8™ core • 800 MHz
MEMORY	128 x 4 MB (DDR2 SDRAM)
Storage	4GB (INAND FLASH)
LCD	10.2 inch WSVGA (1024 x 600) TFT LCD
Speaker	MONO 300 mW
RS485	2 Ports
USB/SD	• MICRO USB 1EA (for external USB memory) • MINI USB 1EA (for service) • SD Card 1EA
DI	2 Ports
DO	2 Ports
Touch Screen	C-Type Touch Panel
Button Key	Less than 9 seconds (LCD POWER ON/OFF), 10 seconds (SYSTEM RESET)
POWER	12 V⎓ (3.33 A), 24 V~
OS	Linux
IP rating	IP20

NOTE

Product specifications may be different depending on the S/W version.

3.4 Product Description

3.4.3.2 Name and Functions

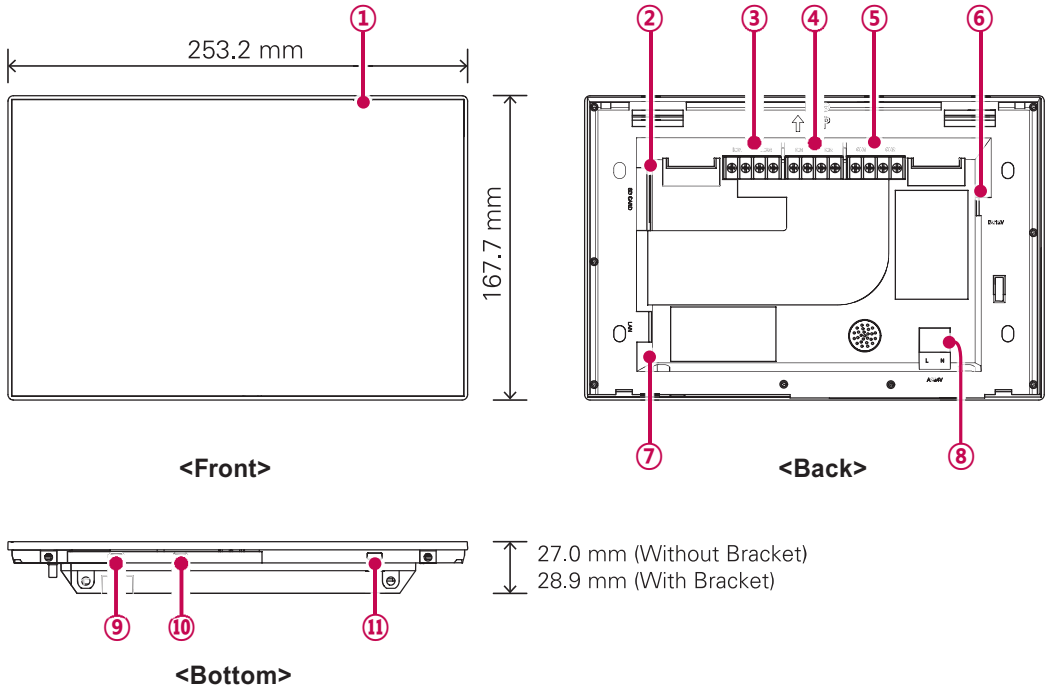

Number	Item	Description
①	Touch Screen	• 10.2 inch LCD control panel • AC Smart IV control and information display
②	SD Memory Slot	SD card memory slot
③	DO Port	2CH DO port
④	DI Port	2CH DI port
⑤	485 Port	2CH 485 port (CH1: AHU and MODBUS communication device, CH2: devices other than AHU and MODBUS communication device)
⑥	12 V⎓ Input Port	12 V⎓ power input port
⑦	LAN Port	LAN cable port for Ethernet connection (100Mbps/10Mbps)
⑧	24 V~ Input Port	24 V~ power input port
⑨	Micro USB Port (for service)	Port for upgrading software and storing floor plans, reports, statistics, etc. (It needs cable to connect USB memory sticks, supporting USB 2.0 or later)
⑩	Mini USB Port	PC port for debugging software
⑪	Power ON/OFF	• Push less than 10 seconds to control AC Smart IV LCD backlight. • Push 10 seconds or more to reset AC Smart IV. • If you are not going to use AC Smart IV for a long time, it is recommended that the product be turned off to prolong the LCD backlight's life.

3.4 Product Description

■ Dimensions

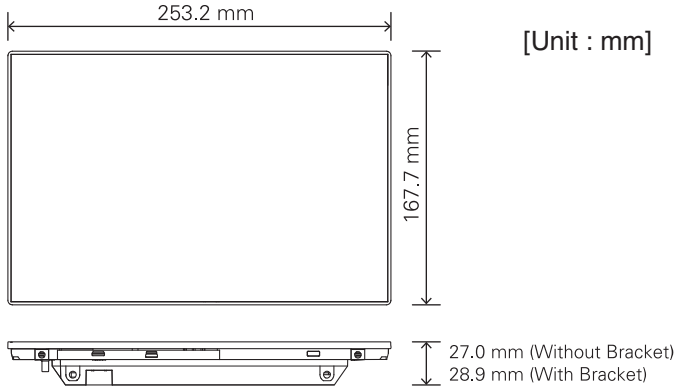

3.4.3.3 Field Wiring Diagram

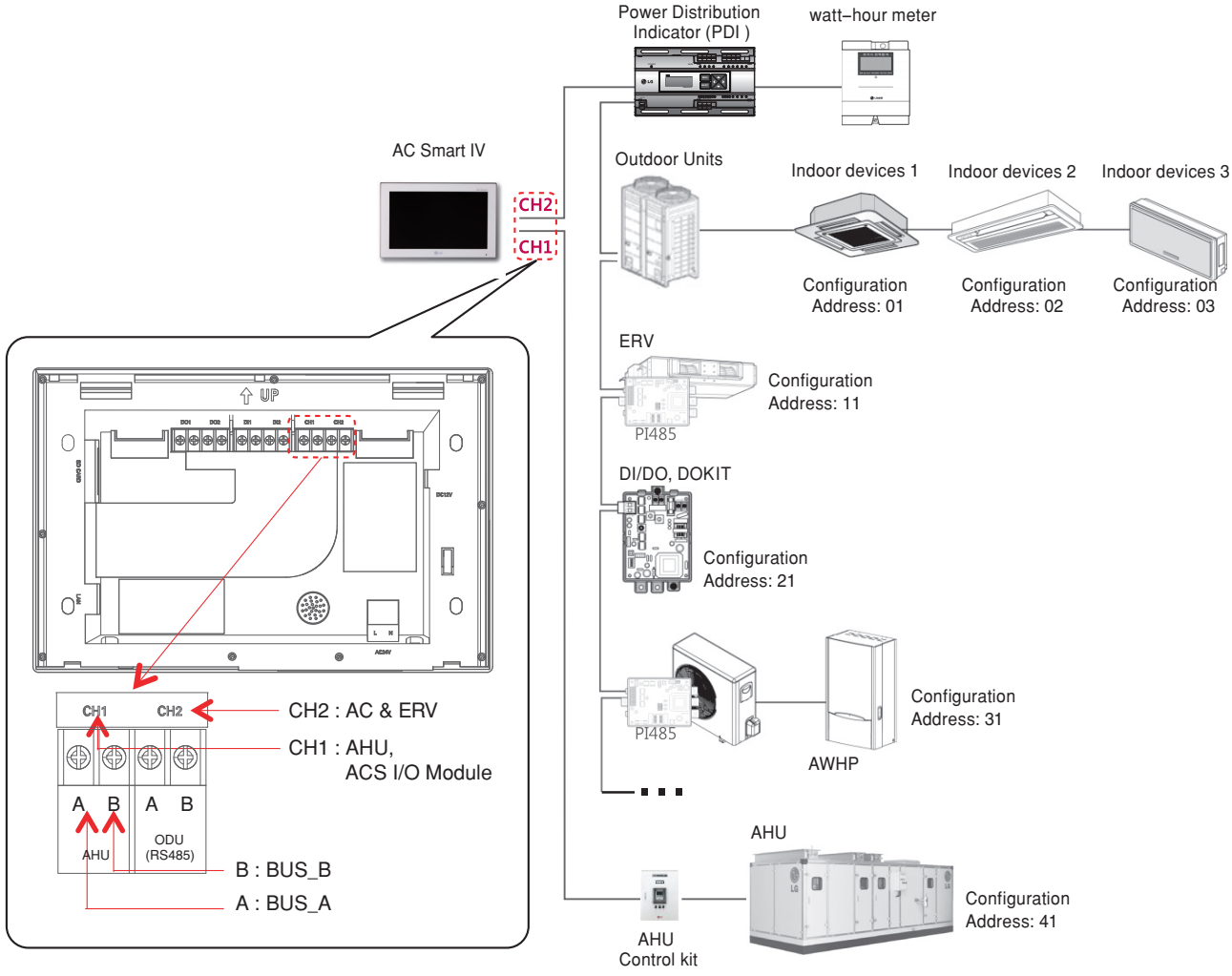

3.4.4 ACP IV

- Model name : PACP4B000

ACP IV (Advanced Control Platform IV) is the central controller that can manage up to 256 equipments in one space individually or as combined. ACP IV can monitor or control the equipments installed in each room of the building from the places such as the management office of a building or the administration office of a school.

■ Embedded web server function

Without an installation of a separate PC program, when IP address of ACP IV is input in the address window using Internet Explorer, the central control program in ACP IV web server is automatically run, and the functions of various contents can be used.

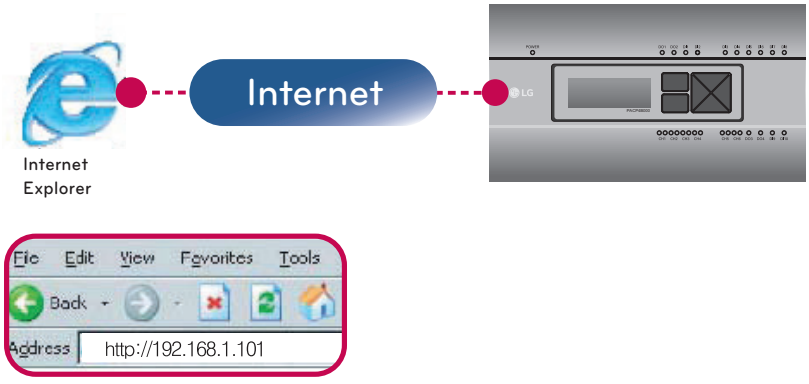

Controlling of up to 256 air conditioner indoor units (ACS I/O Interlocking : Control up to 128 indoor units and 16 I/O modules)

- Monitoring of error and operation status
- Controlling the peak power / demand power
- System setting function
- Up to 16 AHU can be interlocked

■ Devices that can interface with ACP IV

Device	ACP IV
AC Ez	O
AC Smart IV	O
AC Manager IV	O
Air Conditioner	O
ERV	O
AWHP	O
Remote Shutdown	O
Demand Controller	O
Chiller	O (with chiller option S/W applied)
AHU	O
ACS I/O	O
IP rating	IP20

NOTE

Product specifications may be different depending on the S/W version.

3.4 Product Description

3.4.4.1 Specifications & Dimensions

■ Features

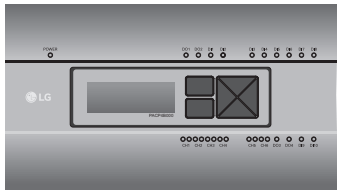

ACP IV

■ Accessory

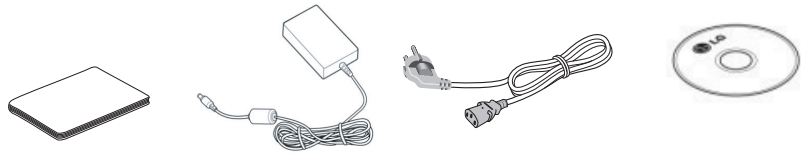

Installation / User manual

Power Supply Adaptor
Input: 100-240 V~
50/60 Hz, 1.2 A
Output: 12 V⎓
3.33 A, 40 W MAX

Power Cord
250 V~, 3A

ACP IV
Installation/User Manual CD

NOTE

Components or options may differ from the actual product picture.

■ Product Specifications

Categories	Description
Boundary of usage temperature	0°C~40°C
CPU	i.MX515 - 32Bit 800MHz speed
RAM	128MB DDR2 SDRAM * 2EA
ROM	4GB i-NAND Flash
Communication ports	- Ethernet 10 / 100 BASE-T - USB : USB Host (SW upgrade, data backup) mini USB Device (Debug) - RS485 communication ports 6EA - SD card slot (RS485 communication logging) - RS-232 Console Port (HMI)
External input/output ports	- DI 10EA-Dry contact(N/O), DO 4EA-Relay Output(N/O, Max 30 V⎓ / 1A)
LED	27EA (RS communication status, Ethernet communication status, power status, operation status)
LCD	20 ×4 Character-LCD (network environment setting and information display)

NOTE

License policy
This product follows GPL (General Public License) for the use of Embedded Linux.

3.4 Product Description

■ Dimensions

[Unit : mm]

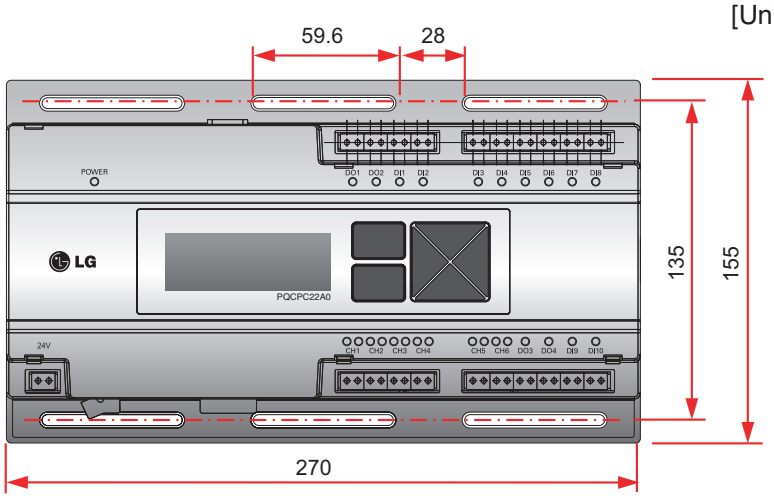

❊ Detailed figures are slightly different, depending on each Model.

■ Names of each part of ACP IV

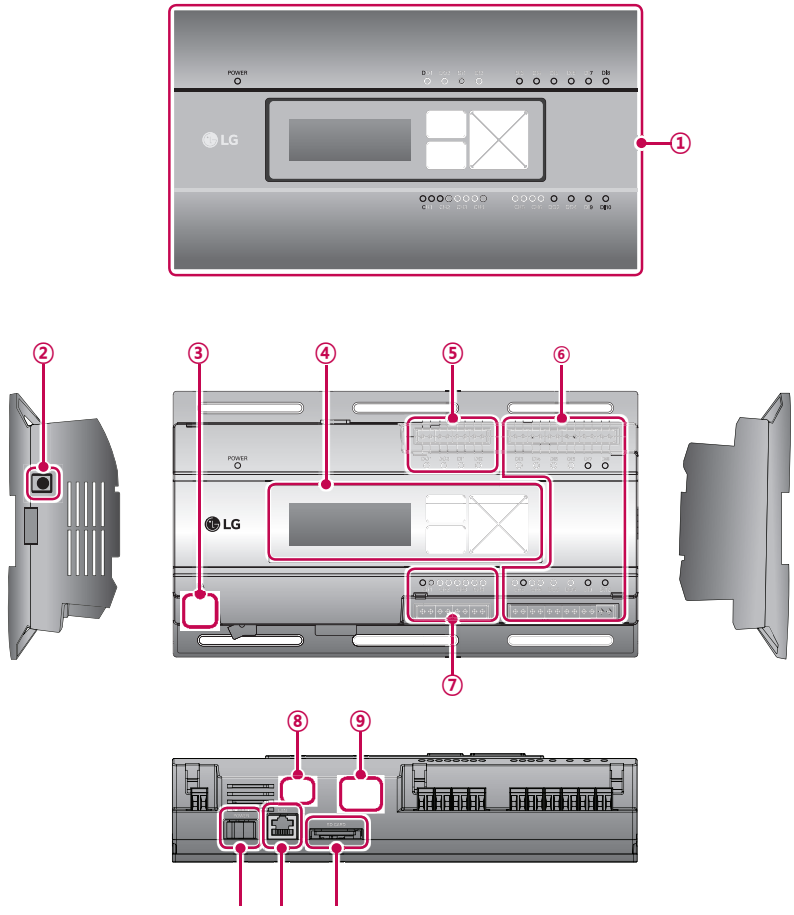

3.4 Product Description

Number	Item	Description
①	Cover	Front cover of the ACP IV
②	Adaptor connection jack	Jack for 12 V⎓ to connect to the power supply adaptor
③	Power port	24 V~ port for power connection (not supported by 12 V⎓ model)
④	Buttons and LCD	Buttons and LCD to set network environment and to display other information
⑤	Basic external input/ output signal connectors	Connection ports to connect to external input/output signals (DI:2, DO:2)
⑥	Optional input/output and RS485 communication port.	8 DI's & 2 DO's are available to connect external I/O. CH5 & CH6 are Modbus Channels (Not used in US)
⑦	RS485 communication port	RS485 communication ports to connect to air conditioner and ERV equipment (4 in total)
⑧	Mini USB port	USB to Serial port for software debugging
⑨	USB port	For software update and data backup
⑩	Power switch	Switch to turn on or off the power of the ACP IV
⑪	Ethernet port	Ethernet port to connect to internet and AC Manager IV
⑫	SD card slot	For RS485 communication data backup.

NOTE

Product specifications may be different depending on the S/W version.

3.4 Product Description

3.4.4.2 Field Wiring Diagram

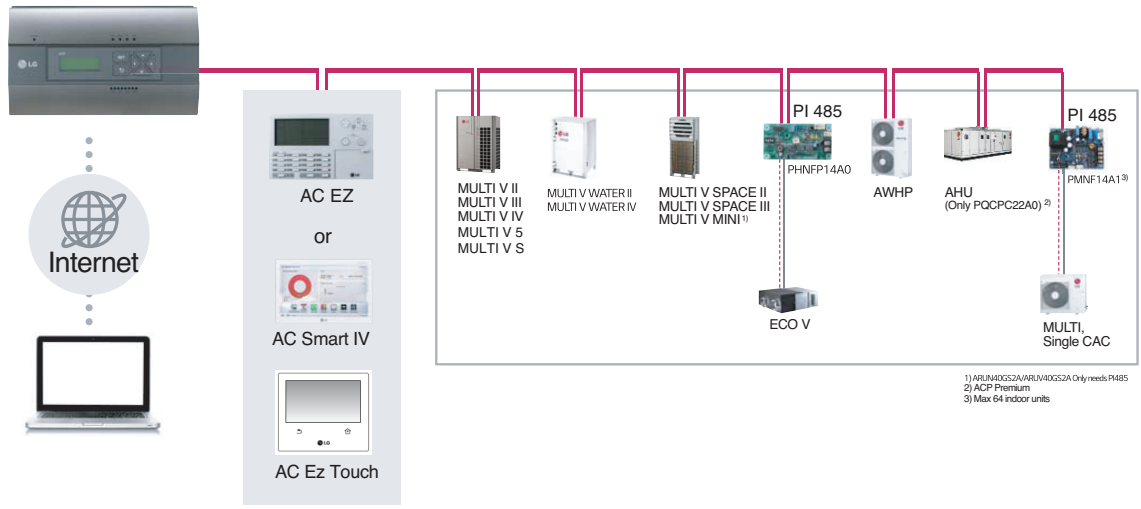

Connecting RS485 cable to the ACP IV

Up to 16 outdoor units can be connected to one RS485 port of the ACP IV, and up to 256 indoor units can be connected to one ACP IV. If there are many outdoor units to connect, the outdoor unit connections shall be appropriately connected to CH1 to CH4 in BUS format. Otherwise, the ACP IV may malfunction.

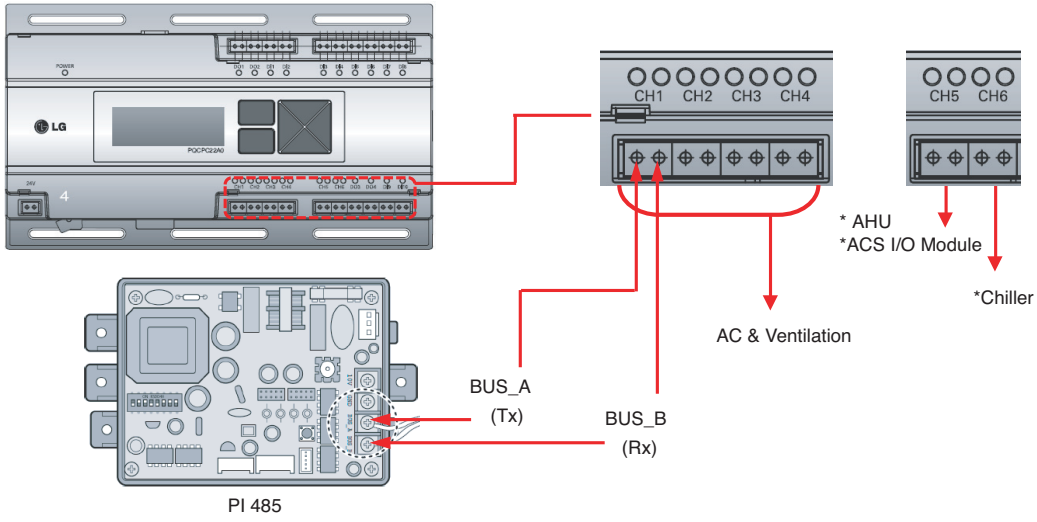

* Detailed figures are slightly different, depending on each Model.
* Chiller is optional. It can be activated by installing additional CHILLER OPTION program.

- RS485 communication cable connection
  There is a polarity in RS485 communication cable connection, so be careful not to reverse the connection of the two cables. Do not let the length of RS485 communication cable exceed total of 1 km. RS485 communication cable must be connected with BUS type.
- IP address of the ACP IV
  IP address of the ACP IV, address of Gateway, and Net mask must be requested to the person in charge of the network of the corresponding site.

NOTE

Product specifications may be different depending on the S/W version.

3.4.5 BACnet

3.4.5.1 ACP BACnet

ACP BACnet is the central controller that can manage up to 256 equipments in one space individually or as combined. ACP BACnet can monitor or control the equipments installed in each room of the building from the places such as the management office of a building or the administration office of a school.

- Model name : PQNFB17C0

■ Embedded web server function

Window using internet Explorer, the central program in ACP BACnet web server is automatically run, and the functions of various contents can be used.

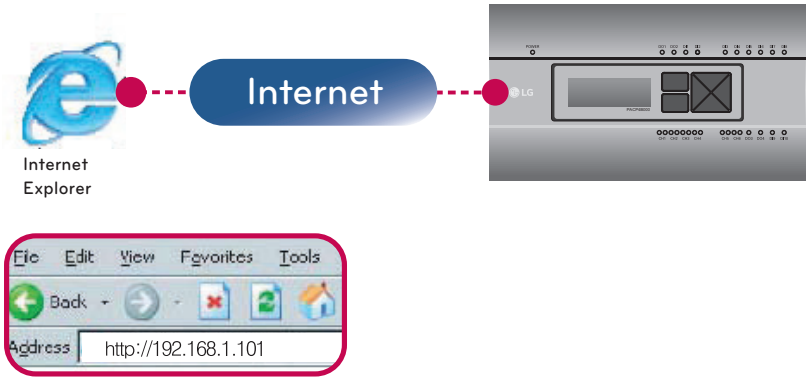

- Controlling of up to 256 air conditioner indoor units
- Monitoring of error and operation status
- Controlling the peak power / demand power
- System setting function

■ Devices that can interface with ACP BACnet

Device	ACP BACnet
AC Ez	O
Simple Central Controller	O
AC-Smart	O
AC Manager	O
Air Conditioner	O
ERV	O
AWHP	O
Remote shutdown	O
Chiller	X
AHU	O
IP rating	IP20

NOTE

Product specifications may be different depending on the S/W version.

3.4 Product Description

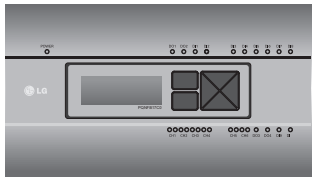

ACP BACnet

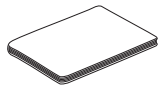

Installation / User manual

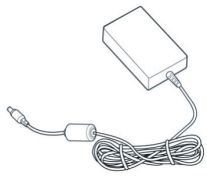

*** Power Supply Adaptor
Input: 100-240 V~
50/60 Hz, 1.2 A
Output: 12 V⎓
3.33 A, 40 W MAX

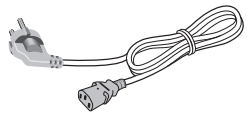

Power Cord
250 V~, 3 A

ACP BACnet Installation/User Manual CD

NOTE

Power Supply Adaptor and Power Cord are not included in PQNFB17C1, PQNFB17C2.
*** North America model requires 24 V~ external power supply.
(Select an insulating transformer that complies with IEC61558-2-6 and NEC Class 2.)

■ ACP BACnet hardware specification

ACP BACNET HARDWARE SPECIFICATION IS AS FOLLOWS.

Category	Description
Boundary of usage temperature	0 °C ~ 40 °C (32 °F ~ 104 °F)
Rated Voltage	12 V⎓ & 24 V~ Depending on Model
Rated Current	Max 2.3 A
Communication ports	• Ethernet 10 / 100 BASE-T • USB : USB Host (SW upgrade, data backup) mini USB Device (Debug) • RS485 communication ports 6EA • SD card slot (RS485 communication logging)
External input/output ports	DI 10EA-Dry contact(N/O), DO 4EA-Relay Output(N/O, Max 30 V⎓ / 1A)
LED	27EA (RS communication status, Ethernet communication status, power status, operation status)
LCD	20 ×4 Character-LCD (network environment setting and information display)

NOTE

Product specifications may be different depending on the S/W version.

3.4 Product Description

■ Dimensions

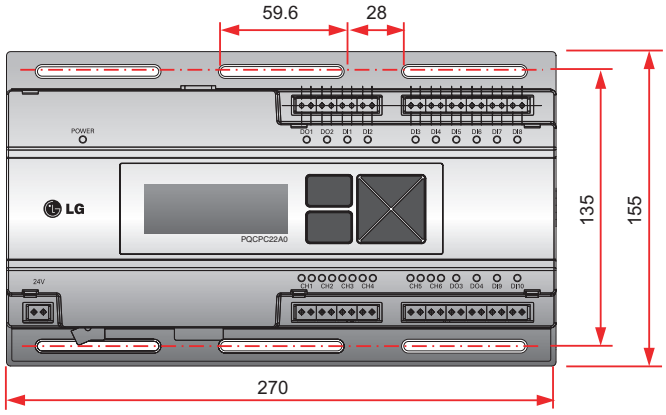

❊ Detailed figures are slightly different, depending on each Model.

■ Names of each part of ACP BACnet

ACP BACnet is composed as follows.

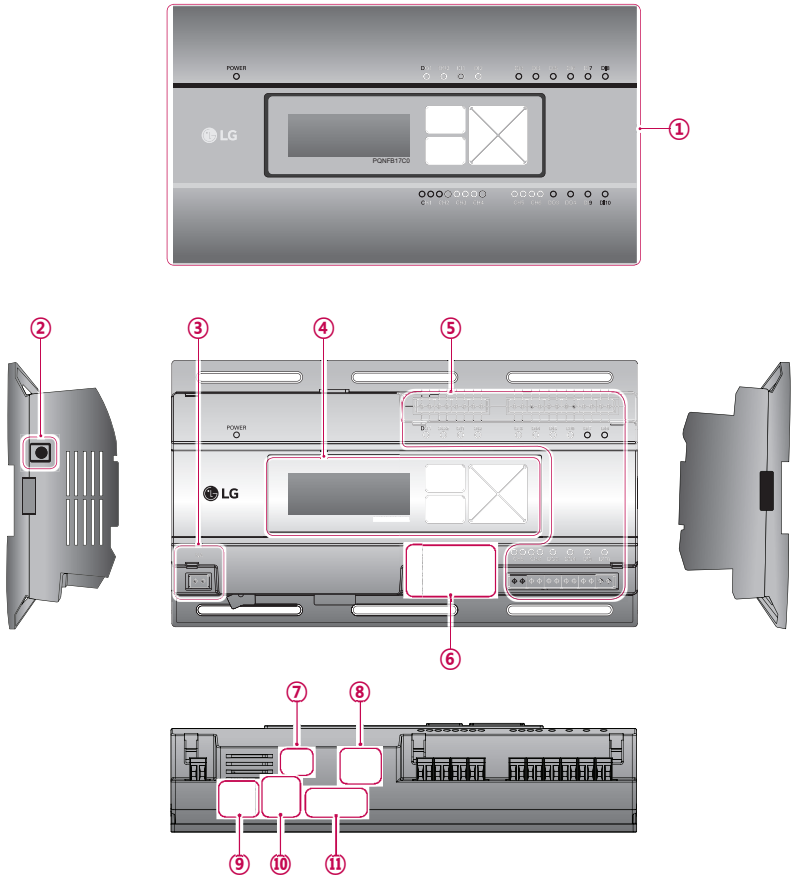

3.4 Product Description

Number	Item	Description
①	Cover	Front cover of the ACP BACnet
②	Adaptor connection jack	Jack for 12 V⎓ to connect to the power supply adaptor (not supported by PQNFB17C1, PQNFB17C2)
③	Power port	24 V~ port for power connection (not supported by PQNFB17C0)
④	Buttons and LCD	Buttons and LCD to set network environment and to display other information
⑤	Optional input/output and RS485 communication port	10 DI's & 4 DO's are available to connect external I/O. CH5 & CH6 are Modbus Channels (Not used in US)
⑥	RS485 communication port	RS485 communication ports to connect to air conditioner and ERV equipment (4 in total)
⑦	Mini USB port	USB to Serial port for software debugging
⑧	USB port	For software update and data backup
⑨	Power switch	Switch to turn on or off the power of the ACP BACnet
⑩	Ethernet port	Ethernet port to connect to internet and AC Manager (AC Manager IV on version 4.0.0 or later)
⑪	SD card slot	For RS485 communication data backup.

NOTE

Product specifications may be different depending on the S/W version.

3.4 Product Description

■ Field Wiring Diagram

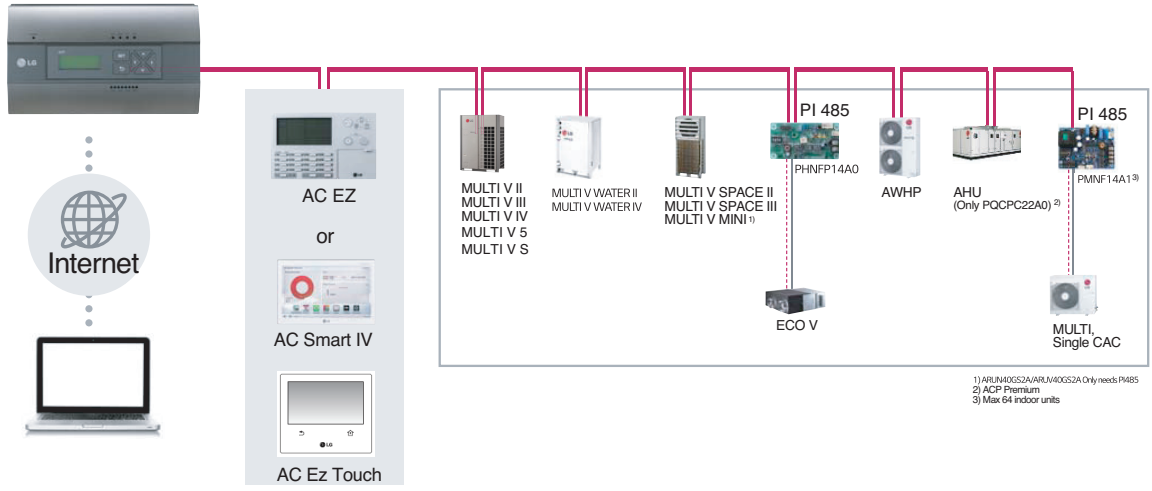

■ Connecting RS485 cable to the ACP BACnet

Up to 16 outdoor units can be connected to one RS485 port of the ACP BACnet, and up to 256 indoor units can be connected to one ACP BACnet. If there are many outdoor units to connect, the outdoor unit connections shall be appropriately connected to CH1 to CH4 in BUS format. Otherwise, the ACP BACnet may malfunction.

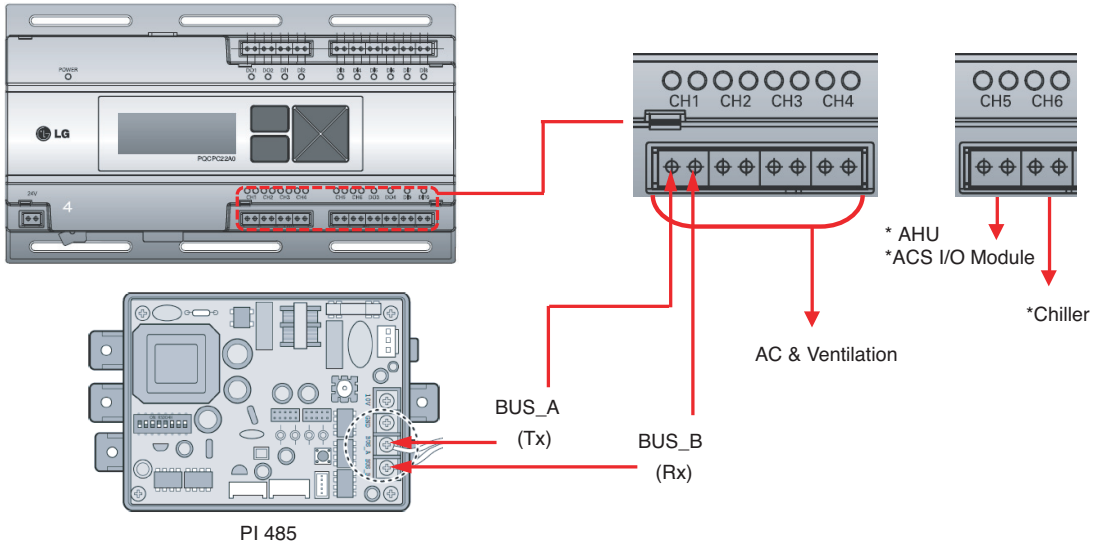

* Detailed figures are slightly different, depending on each Model.
* Chiller is optional. It can be activated by installing additional CHILLER OPTION program.

NOTE

Product specifications may be different depending on the S/W version.

3.4 Product Description

■ Applicable Unit

BACnet/IP	Modbus TCP
- Indoor unit - Ventilator, DX Ventilator - AHU - Outdoor unit (monitoring only) - AWHP	- Indoor unit - Ventilator, DX Ventilator - AHU - AWHP

■ Switch between using BACnet and Modbus?

- They function simultaneously, so there is no specific setting to switch between them.

■ Differences between according to the model

Model	ACP IV	AC Smart IV	ACP BACnet (*New)	ACP Lonworks
Email Alarm	O	O	O	O
Setup Master/Slave	X	O	X	X
Save statistics	O	O	O	O
Save Report	O	O	O	O
Channel setting (For Chiller)	O	O	X	O
Network setting by GUI	O	O	O	X (Front LCD only)
Screen setting	X	O	X	X

O : Supported
X : Not supported
*ACP BACnet information is based on 5.08.1 version

3.4 Product Description

■ Comparison between Old and New PQNFB17C0

Items	Old (~ Nov. 2015)	New (Dec. 2015 ~)
Difference Of Design		
CPU	ARM Cortex A8 800Mhz	ARM Cortex A9 1Ghz
RAM	DDR2 128MB x 2	DDR2 256MB x 2
S/W Ver.	V3.1.5.	V5.08.1
LCD Display	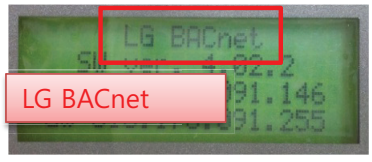	
Email / Save to PC in Report / Log Menu	X 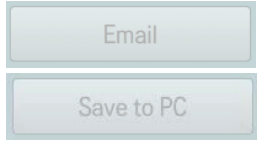	O 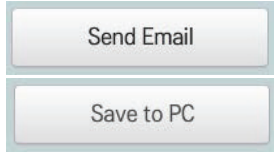
E-mail Setting in Environment Menu	X 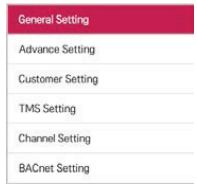	O 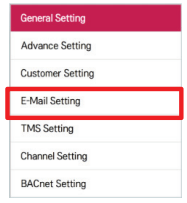
Update S/W, DB Backup / Recovery in Environment Menu	X 	O 

3.4 Product Description

■ Preparation – BACnet Service

• Main services of ACP BACnet

Service	Contents
Who-Is Service	Used to determine the device object identifier and network addresses of all devices on the network
I-Am Service	Used to respond to Who-Is service requests (device number)
ReadProperty	Request the value of one property of one BACnet Object
ReadPropertyMultiple	Request the values of one or more specified properties of one or more BACnet objects.
WriteProperty	Modify the value of a single specified property of a BACnet object
WritePropertyMultiple	Modify the value of one or more specified properties of a BACnet object.

• Sequence

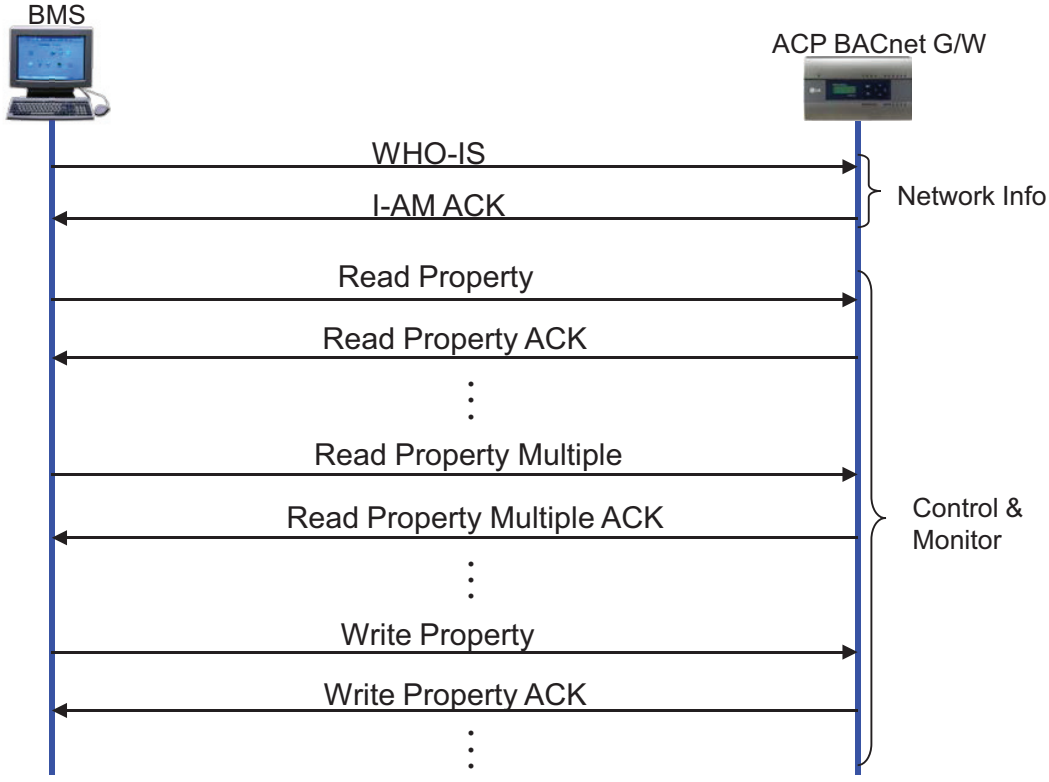

3.4 Product Description

■ Preparation – BACnet Communication

• Data transmission type : Polling vs COV (Change of Value)

- Polling : ACP BACnet waits passively for BMS to poll them for data, and only then do the respond
- COV : When a value change has occurred, BACnet G/W sends notifications to the subscribers(BMS)

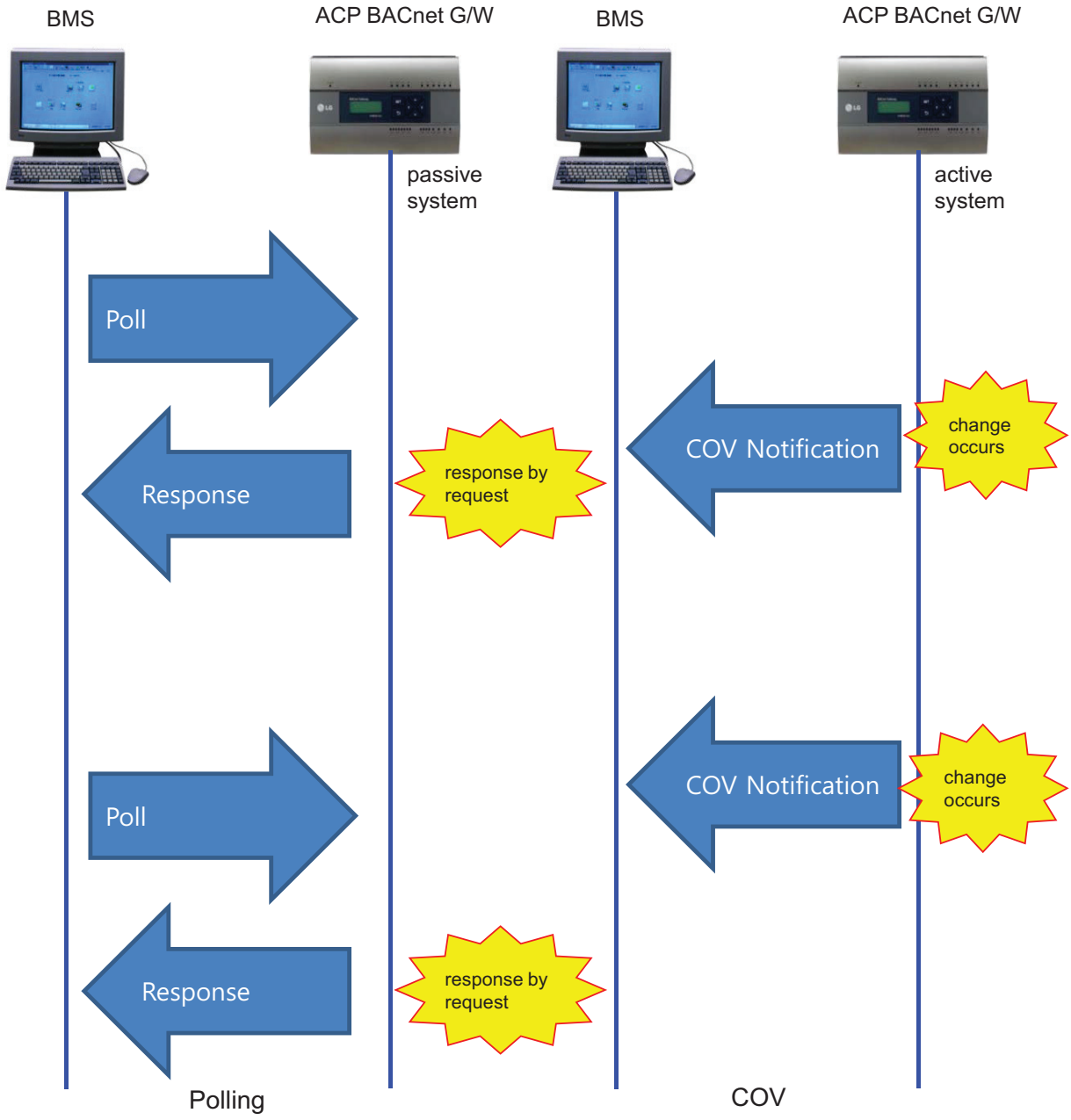

3.4 Product Description

■ System Setting

- **Each unit type has different Device instance no.**
  - Default(first device instance number) is 9000
  - Change device instance number to be unique if necessary

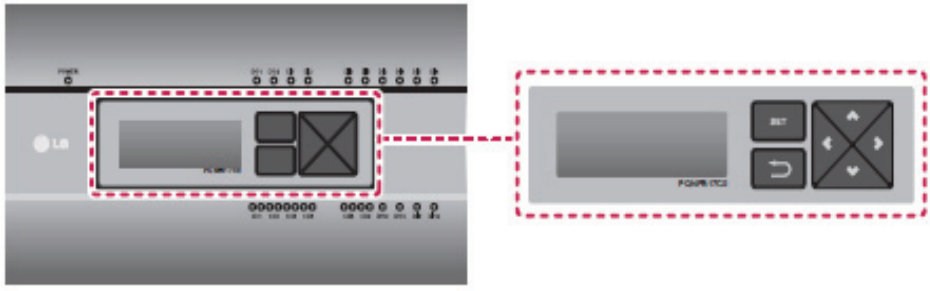

Device instance No	Product type
9000	Airconditioner
9001	Ventilation
9002	AHU
9004	AWHP

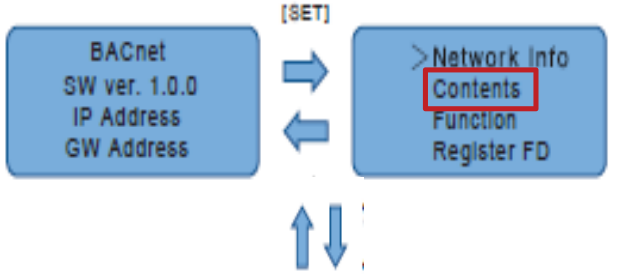

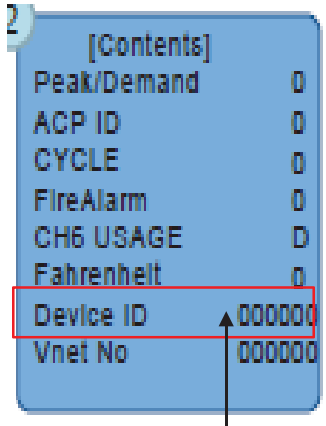

*9003 : ODU status points

Device instance number setting (default = 9000)

Central Controller

3.4 Product Description

■ Commissioning Step

1. Check all of LG unit status by using Web server S/W

2. Offering information of BACnet points to BMS

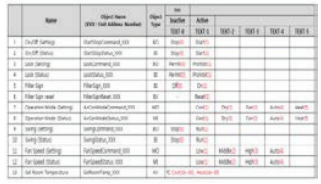

3. Mapping BACnet points with BMS S/W (BMS job)

4. JMT PASS?

NO

Troubleshoot

- Check setting
  - Device Instance no.
  - IP address
- Get the advice from HQ

YES

END

3.4 Product Description

■ Certification & PICS

Link → http://www.bacnetinternational.net/btl/index.php?m=97

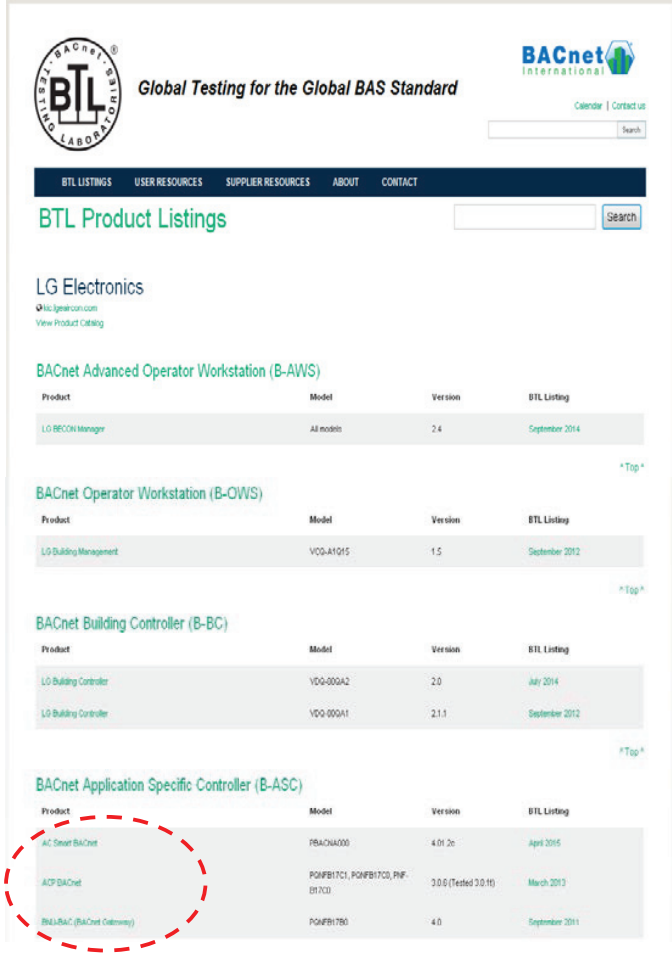

→

Central Controller

3.4 Product Description

■ Preparation – Modbus Concept

• Master / Slave Communication Architecture

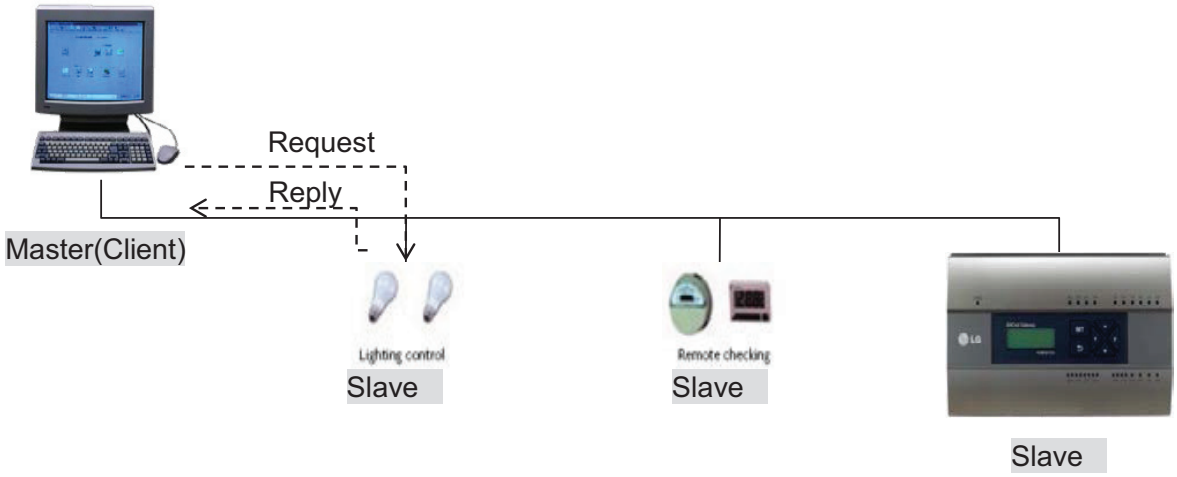

• Modbus transaction

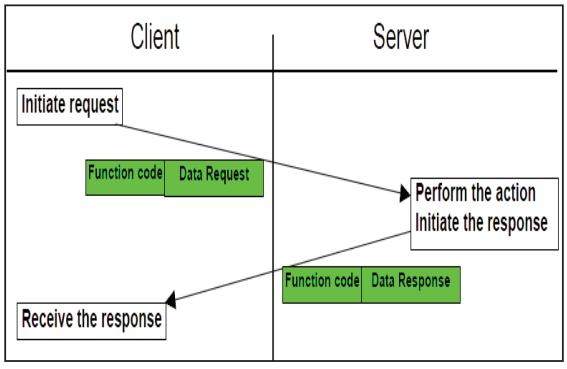

Modbus transaction (error free)

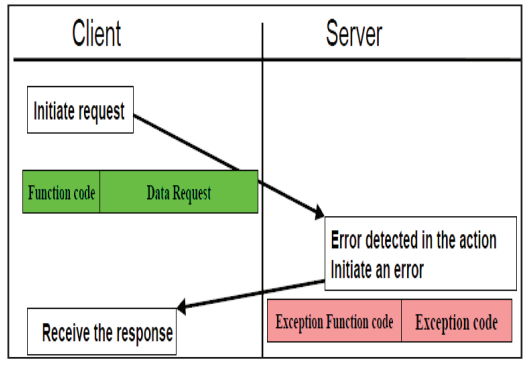

Modbus transaction (error response)

3.4 Product Description

■ System Setting

• Set the Unit ID

- 'Vnet No' setting on the LCD (default value is 10)
- Each ACP BACnet must have unique ID.

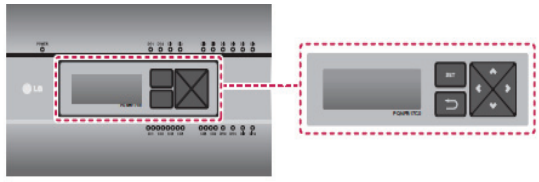

ex)

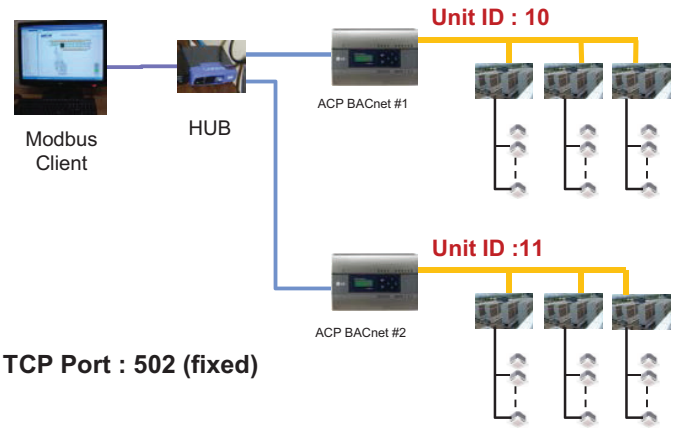

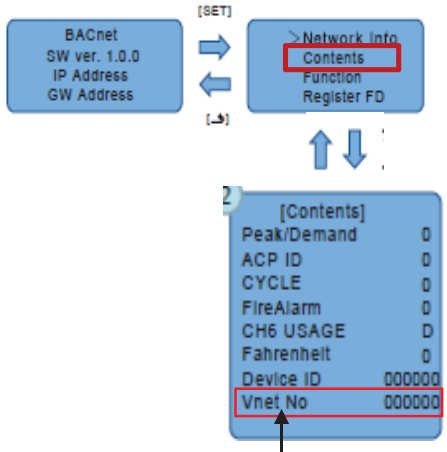

Vnet No setting
(default = 10)

• TCP Port : 502 (fixed)

■ Message Frame

• Request

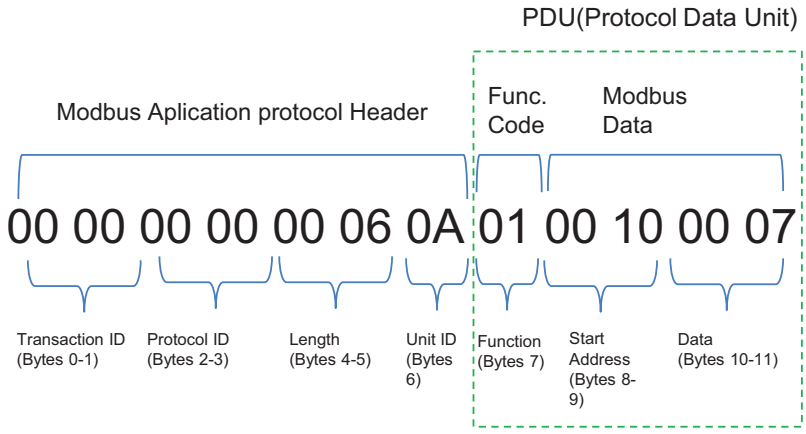

* Protocol ID : 0 (fixed) / Length : remaining bytes in this frame

1. Unit ID : 'Vnet no' setting value (default : 10 (0x0A))
2. Function Code
   → 01 : Read Coils,
   03 : Read Holding Register,
   05 : Write Single Coils,
   06 : Write Single Register
3. Starting Address structure

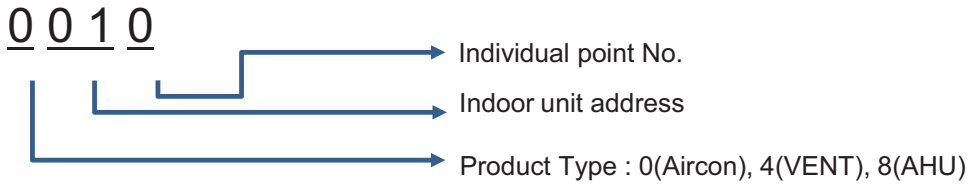

4. Data : Count to read
   → ex) 00 07 : read 7 points

• **Response**

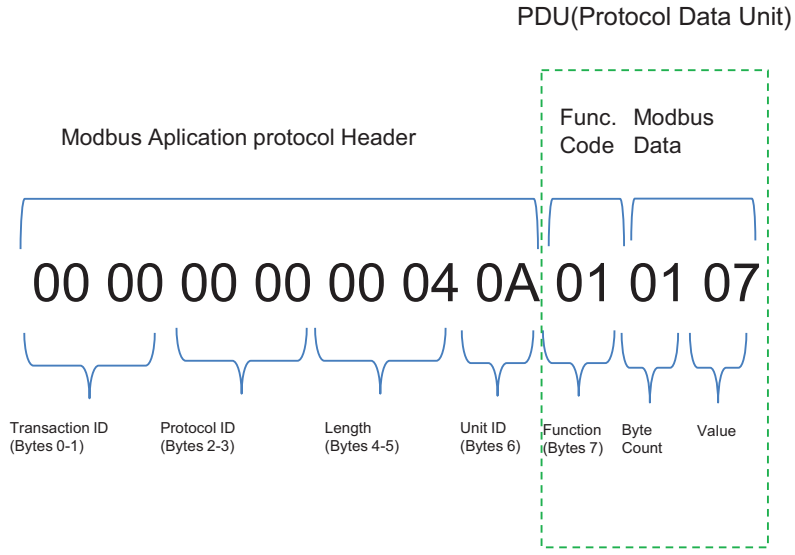

* Protocol ID : 0 (fixed) / Length : remaining bytes in this frame

1. Unit ID : 'Vnet no' setting value (default : 10 (0x0A))
2. Function Code
   → 01 : Read Coils,
   03 : Read Holding Register,
   05 : Write Single Coils,
   06 : Write Single Register
3. Byte Count : bytes to read
4. Value

• **Example**

Read Coils(0x01)

Starting addr Count

Request 0A 01 00 00 00 01

→What is operation status of indoor unit 00 ?

Response 0A 01 01 01

Byte Count Value

→ Addr 00 indoor unit is running.

Write single Coils(0x05)

Output addr Value

Request 0A 01 00 00 00 01

→Turn On indoor unit 00

Response 0A 01 01 01

Byte Count Value

→ Addr 00 indoor unit is running.

■ BACnet Type Setting

ACP BACnet has 2 kinds of response type. It can be selected with Service Tool.

• A Type : When responding to the BACnet protocol, the MAC address is the same regardless of the Device ID.
• B Type : When responding to the BACnet protocol, the MAC address depends on the Device ID

How to set Type B
1. Input IP address of ACP BACnet
2. Click BACnet Type B button

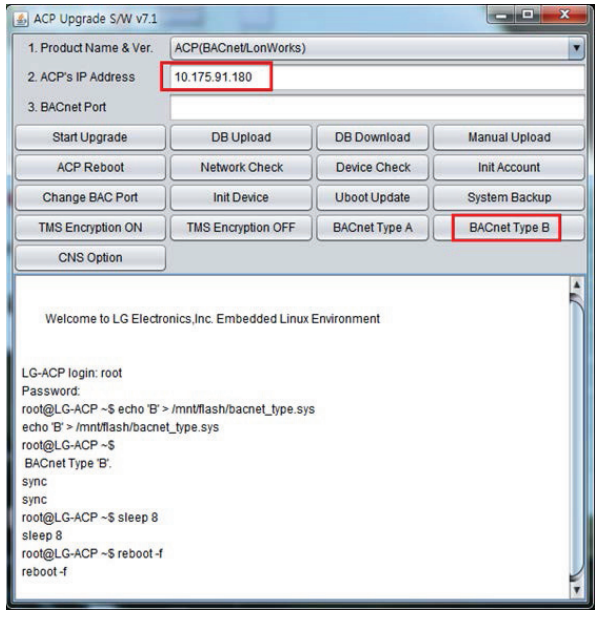

3.4.5.2 AC Smart BACnet

- Model name : PBACNA000

AC Smart BACnet is a central controller installed in the management office of a building, or in the administration office of a school, to monitor and operate, via touch screen or Web access, the indoor units, ERV (ERV: Energy Recovery Ventilator, ERV DX: Direct Expansion Energy Recovery Ventilator), DI/DOs, DOKITs, AWHPs, AHUs and I/O Modules installed inside the building. AC Smart BACnet can manage, collectively or individually, the indoor units, ERV, DI/DOs, DOKITs, AWHPs and AHUs for up to 128 devices. (Or the indoor units, ERV, DI/DOs, DOKITs, AWHPs and AHUs for up to 64 devices and 9 I/O Modules)

◉ Specifications & Dimensions

■ Features

AC Smart BACnet

■ Accessory

AC Smart BACnet User's Manual

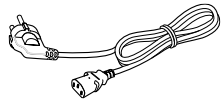

Power Cord

Power Adapter

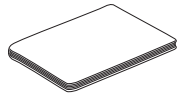

Installation / User manual

■ Product Specifications

Item	Specifications
CPU	PCIMX5150D • ARM Cortex A8™ core • 800 MHz
MEMORY	128 x 4 MB (DDR2 SDRAM)
Storage	4GB (INAND FLASH)
LCD	10.2 inch WSVGA (1024 x 600) TFT LCD
Speaker	MONO 300 mW
RS485	2 Ports
USB/SD	• MICRO USB 1EA (for external USB memory) • MINI USB 1EA (for service) • SD Card 1EA
DI	2 Ports
DO	2 Ports
Touch Screen	C-Type Touch Panel
Button Key	Less than 9 seconds (LCD POWER ON/OFF), 10 seconds (SYSTEM RESET)
POWER	12 V⎓ (3.33 A), 24 V~
OS	Linux
IP rating	IP20

3.4 Product Description

■ Features and Functions

The features and functions of AC Smart BACnet are as follows.

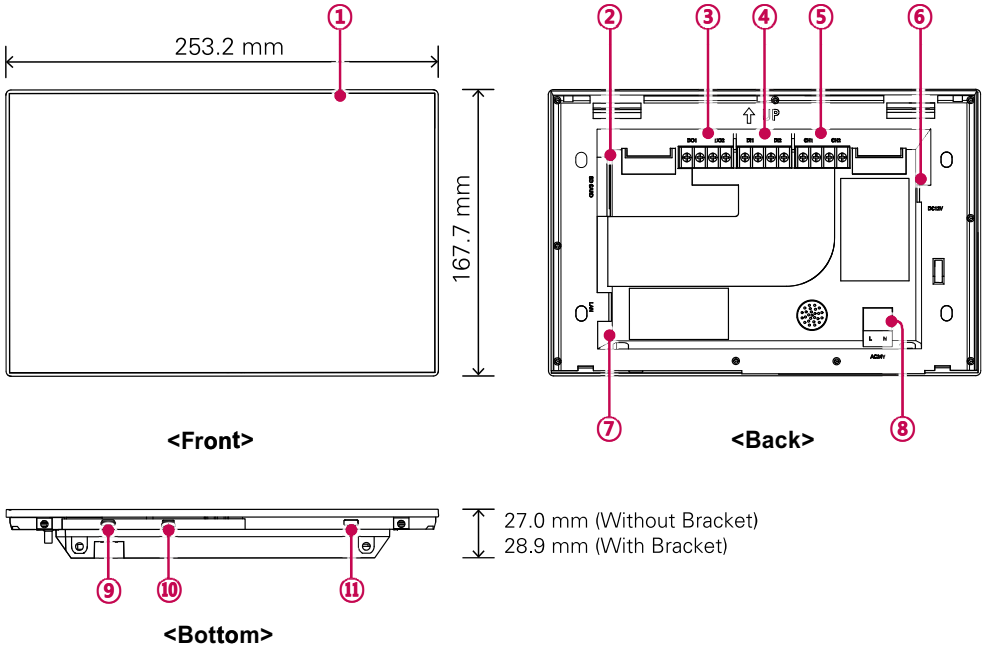

Number	Item	Description
①	Touch Screen	• 10.2 inch LCD control panel • AC Smart BACnet control and information display
②	SD Memory Slot (for service)	SD card memory slot for software upgrade
③	DO Port	2CH DO port
④	DI Port	2CH DI port
⑤	485 Port	2CH 485 port (CH1: AHU, CH2: devices other than AHU)
⑥	12 V⎓ Input Port	12 V⎓ power input port
⑦	LAN Port	LAN cable port for Ethernet connection (100Mbps/10Mbps)
⑧	24 V~ Input Port	24 V~ power input port
⑨	Micro USB Port	USB 2.0 to connect USB memory sticks storing floor plans, reports, statistics, etc.
⑩	Mini USB Port (for service)	PC port for software upgrade
⑪	Power ON/OFF	• Push less than 10 seconds to control AC Smart BACnet LCD backlight. • Push 10 seconds or more to reset AC Smart BACnet. • If you are not going to use AC Smart BACnet for a long time, it is recommended that the product be turned off to prolong the LCD backlight's life.

3.4.6 ACP Lonworks

ACP Lonworks(ACP Lonworks Gateway) is the central controller that can manage up to 64 equipments in one space individually or as combined.

• In case of air conditioner indoor unit, up to 64 indoor units
• In case of AHU unit, up to 16 units
* It is required a separate ACP Lonworks for each other product type(air conditioner, AHU).
ACP Lonworks can't to connect air conditioner indoor unit, AHU unit at the same time.

- Model name : PLNWKB000

■ Embedded web server function

Without an installation of a separate PC program, when IP address of ACP Lonworks is input in the address window using Internet Explorer, the central control program in ACP Lonworks web server is automatically run, and the functions of various contents can be used.

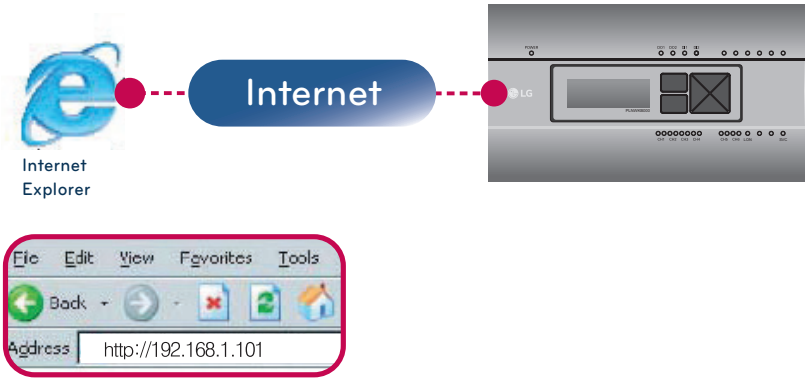

• Controlling of Up to 64 indoor units (up to 48 indoor units on PLNWKB100 version 2.2.0 or later)
• Monitoring of error and operation status
• Controlling the peak power / demand power
• System setting function

■ Devices that can interface with ACP Lonworks

Device	ACP Lonworks
AC Ez	O
Simple Central Controller	O
AC Smart IV	O
AC Manager IV	O
Air Conditioner	O
ERV	O
AWHP	O
Remote Shutdown	O
Demand Controller	O
AHU	O
IP rating	IP20

NOTE

Product specifications may be different depending on the S/W version.

3.4 Product Description

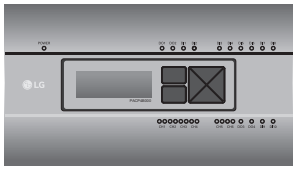

ACP Lonworks

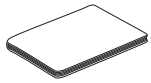

Installation /
User manual

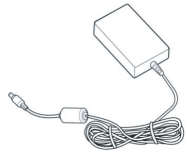

Power Supply Adaptor
Input: 100-240 V~
50/60 Hz, 1.2 A
Output: 12 V⎓
3.33 A, 40 W MAX

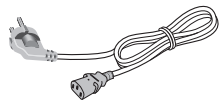

Power Cord
250 V~, 3A

ACP Lonworks
Installation/User Manual CD

NOTE

- May be different from the image that has been shown and items sold separately parts.
- Power Supply Adaptor and Power Cord are not included in PLNWKB100 (24 V~ power use)

■ ACP Lonworks hardware specification

Category	Description
Boundary of usage temperature	0 °C ~ 40 °C
Rated Voltage	12 V⎓ (PLNWKB000), 24 V~(PLNWKB100)
Rated Current	Max 2.3 A
CPU	i.MX515 – 32Bit 800 MHz speed(Option:MPC5668G, 116 MHz)
RAM	128MB DDR2 SDRAM * 2EA
ROM	4GB i-NAND Flash
Communication ports	• Ethernet 10 / 100 BASE-T • USB: USB Host (SW upgrade, data backup) mini USB Device (Debug) • RS485 communication ports 6EA • Lon communication port 1EA • SD card slot (RS485 communication logging) • RS-232 Console Port (HMI)
External input/output ports	DI 2EA-Dry contact(N/O), DO 2EA-Relay Output(N/O, Max 30 V⎓ / 1A)
LED	27EA (RS communication status, Ethernet communication status, power status, operation status)
LCD	20 ×4 Character-LCD (network environment setting and information display)

NOTE

Product specifications may be different depending on the S/W version.

3.4 Product Description

■ Dimensions

[Unit : mm]

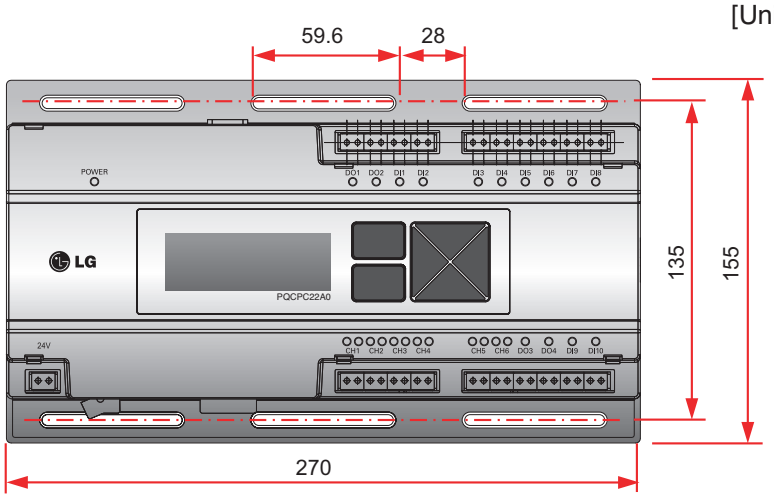

❊ Detailed figures are slightly different, depending on each Model.

■ Names of each part of ACP Lonworks

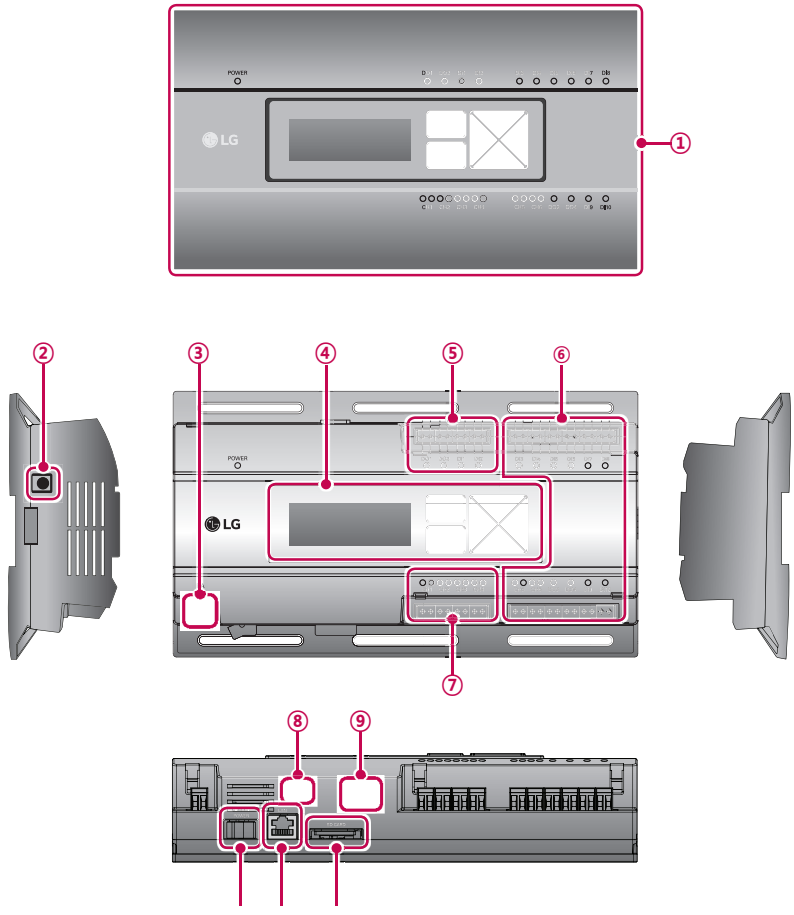

3.4 Product Description

Number	Item	Description
①	Cover	Front cover of the ACP Lonworks
②	Adaptor connection jack	Jack for 12 V⎓ to connect to the power supply adaptor
③	Power port	24 V~ port for power connection (not supported by 12 V⎓ model)
④	Buttons and LCD	Buttons and LCD to set network environment and to display other information
⑤	Basic external input/ output signal connectors	Connection ports to connect to external input/output signals (DI:2, DO:2)
⑥	Optional input/output and RS485 communication port.	2 DI's & 2 DO's are available to connect external I/O. CH5 & CH6 are Modbus Channels (Not used in US)
⑦	RS485 communication port	RS485 communication ports to connect to air conditioner and ERV equipment (4 in total)
⑧	Mini USB port	USB to Serial port for software debugging
⑨	USB port	For software update and data backup
⑩	Power switch	Switch to turn on or off the power of the ACP IV
⑪	Ethernet port	Ethernet port to connect to internet and AC Manager IV
⑫	SD card slot	For RS485 communication data backup.

NOTE

Product specifications may be different depending on the S/W version.

3.4 Product Description

3.4.6.1 Field Wiring Diagram

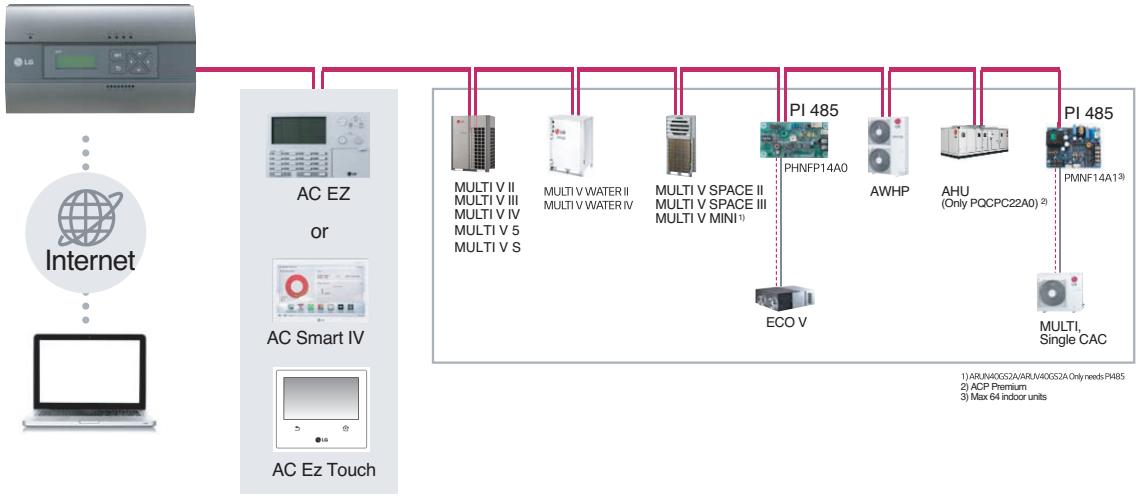

■ ACP Lonworks

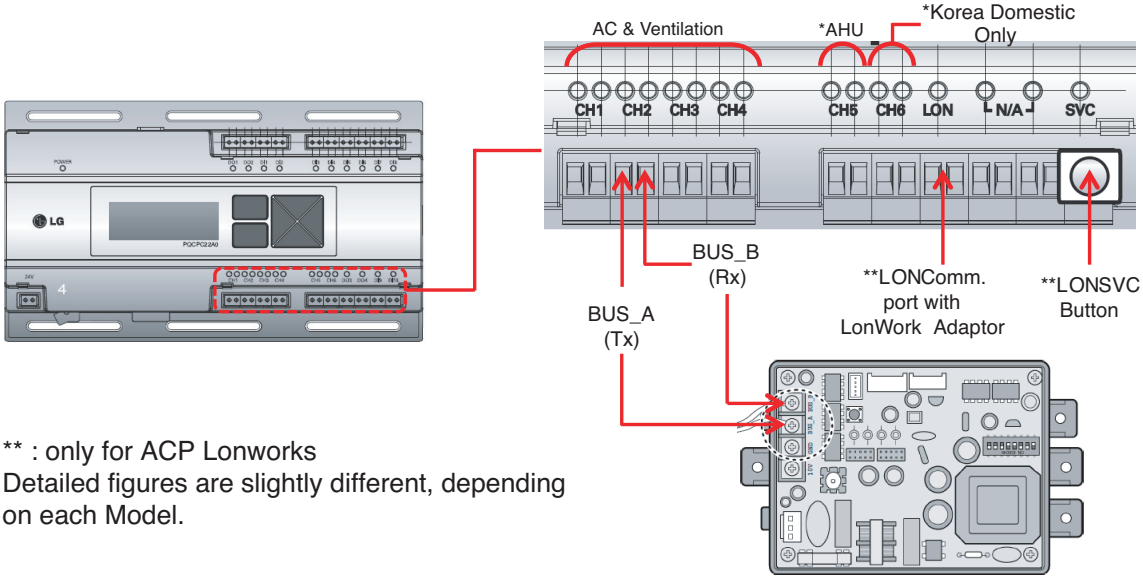

❊ ** : only for ACP Lonworks
❊ Detailed figures are slightly different, depending on each Model.

NOTE

Product specifications may be different depending on the S/W version.

3.4 Product Description

■ Remarks

• Applicable Unit
- AC, ERV, ERV DX, AWHP, AHU
- AHU and other units cannot be supported at one ACP Lonworks (ACP Lonworks dedicated AHU is necessary)

• Addressing Range is '00~FF'
- For Lonworks BMS, only 64 units are allowed
  : It chooses the units from lowest unit address to Higher unit address up to 64 units
  : All addresses don't need to be continuous number
- Max. 256 units are allowed by own interface, same like normal ACP

■ System Setting

• Set Lonworks type
- 0 : AC, ERV, ERV DX, AWHP
- 1 : DX AHU

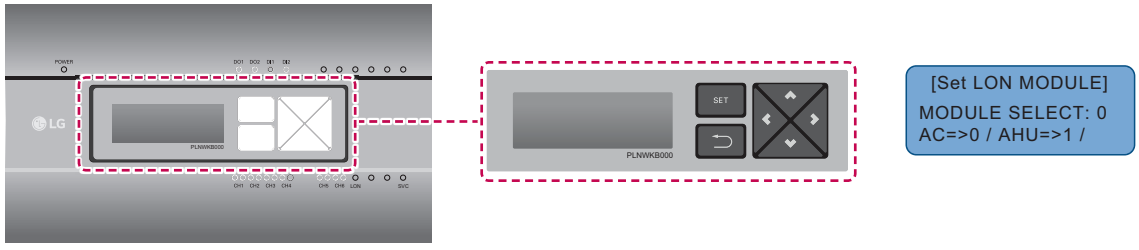

• System Setting

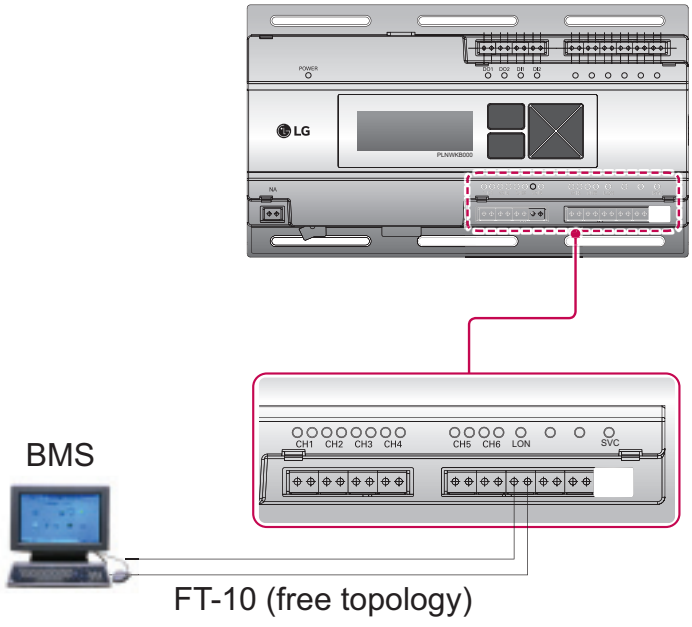

■ Commissioning

Commissioning with XIF file
Commissioning is to get device information of Lonworks G/W **There are 2 commissioning methods** **- One is "upload from device", the other one is using "XIF file"** 1) Using "Upload from device"      2) Using "XIF File" for pre-engineering   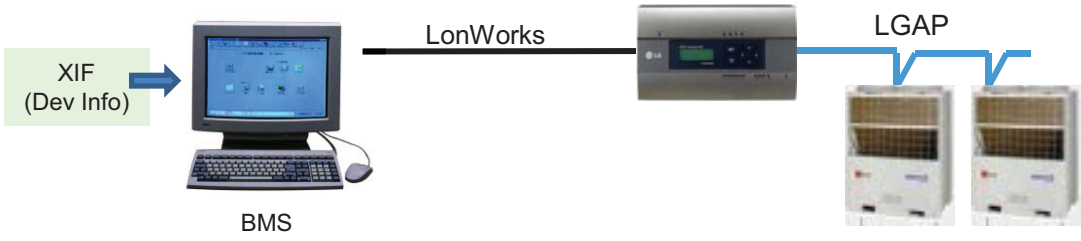

3.4 Product Description

■ Air conditioner Objects

Control	
On/Off	Operation Mode
Lock	Temperature
Fan Level	Fan Direction Auto
Mode Lock	Fan Level Lock
Temperature Lock	Temperature Lower Limit
Temperature Higher Limit	Peak Convert Cycle
Peak Setting	Temperature Unit
Total Temperature Lock	Total OnOff
Total Temperature	

Monitoring	
On/Off	Operation Mode
Lock	Temperature
Fan Level	Fan Direction Auto
Mode Lock	Fan Level Lock
Temperature Lock	Temperature Lower Limit
Temperature Higher Limit	Product Type
Product Address	Current Temperature
Alarm	Power
Error Code	Peak Convert Cycle
Peak Setting	Temperature Unit
Peak Current Operating Percent	Total Accumulate Power
Total Accumulate Power	

① Standard Function Block

Standard Function Block	
SNVT_switch	nviOnOff
SNVT_hvac_mode	nviHeatCool
SNVT_switch	nviLock
SNVT_temp_p	nviSetTemp
SNVT_switch	nviFanSpeedCmd
SNVT_switch	nviSwing_Heater
SNVT_switch	nviModlok
SNVT_switch	nviFanlok
SNVT_switch	nviTmplok_Humid
SNVT_temp_p	nviLow_HW_Tmp
SNVT_temp_p	nviUp_Tmp

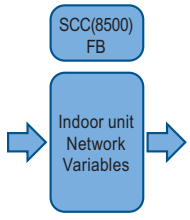

Standard Function Block	
SNVT_switch	nvoOnOff
SNVT_hvac_mode	nvoHeatCool
SNVT_switch	nvoLock
SNVT_temp_p	nvoSetTemp
SNVT_switch	nvoFanSpeed
SNVT_switch	nvoSwing_Heater
SNVT_switch	nvoModlok
SNVT_switch	nvoFanlok
SNVT_switch	nvoTmplok_Humid
SNVT_temp_p	nvoLow_HW_Tmp
SNVT_temp_p	nvoUp_Sol_Tm
SNVT_count	nvoPType
SNVT_count	nvoPAddr
SNVT_temp_p	nvoSpaceTemp
SNVT_hvac_status	nvoUnitStatus
SNVT_elec_kwh_l	nvoAccuPw
SNVT_count	nvoErrorCode

② General Function Block

General Function Block	
SNVT_count	nviPeakSwTime
SNVT_lev_percent	nviPeakTgtRate
SNVT_Switch	nviTempUnit
SNVT_switch	nviAllTemplock
SNVT_switch	nviTotalOnOff
SNVT_temp_p	nviTotalTemp

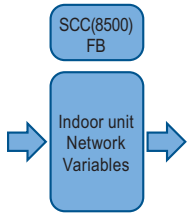

General Function Block	
SNVT_count	nvoPeakSwTime
SNVT_lev_percent	nvoPeakTgtRate
SNVT_Switch	nvoTempUnit
SNVT_lev_percen	nvoPeakCurRate
SNVT_elec_kwh_l	nvoTotalAccuPw

3.4 Product Description

■ ERV Objects

① Standard Function Block

Standard Function Block	
SNVT_switch	nviOnOff
SNVT_hvac_mode	nviHeatCool
SNVT_switch	nviLock
SNVT_switch	nviFanSpeedCmd
SNVT_switch	nviSwing_Heater
SNVT_count	nviUsrmod

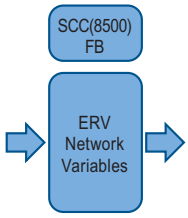

Standard Function Block	
SNVT_switch	nvoOnOff
SNVT_hvac_mode	nvoHeatCool
SNVT_switch	nvoLock
SNVT_switch	nvoFanSpeed
SNVT_switch	nvoSwing_Heater
SNVT_count	nvoUsrmod
SNVT_count	nvoPType
SNVT_count	nvoPAddr
SNVT_hvac_ status	nvoUnitStatus
SNVT_count	nvoErrorCode

② General Function Block

General Function Block	
SNVT_Switch	nviTotalOnOff

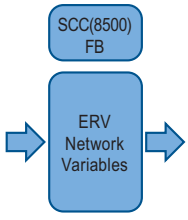

Control	
On/Off	Operation Mode
Lock	Fan Level
Heater	Additional Functionality
Total OnOff	

Monitoring	
On/Off	Operation Mode
Lock	Fan Level
Heater	Additional Functionality
Product Type	Product Address
Alarm	Error Code

3.4 Product Description

■ ERV DX Objects

① Standard Function Block

Standard Function Block	
SNVT_switch	nviOnOff
SNVT_hvac_mode	nviHeatCool
SNVT_switch	nviLock
SNVT_temp_p	nviSetTemp
SNVT_switch	nviFanSpeedCmd
SNVT_switch	nviSwing_Heater
SNVT_switch	nviTmplok_Humid
SNVT_count	nviUsrmod
SNVT_switch	nviIDUrun_HWEn
SNVT_hvac_mode	nviIDUmod

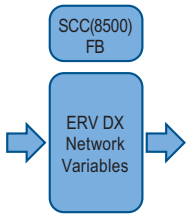

Standard Function Block	
SNVT_switch	nvoOnOff
SNVT_hvac_mode	nvoHeatCool
SNVT_switch	nvoLock
SNVT_temp_p	nvoSetTemp
SNVT_switch	nvoFanSpeed
SNVT_switch	nvoSwing_Heater
SNVT_switch	nvoTmplok_Humid
SNVT_count	nvoUsrmod
SNVT_switch	nvoIDUrun_HWEn
SNVT_hvac_mode	nvoIDUmod
SNVT_count	nvoPType
SNVT_count	nvoPAddr
SNVT_hvac_status	nvoUnitStatus
SNVT_switch	nvoMS_HWmod
SNVT_count	nvoErrorCode

② General Function Block

General Function Block	
SNVT_Switch	nviTempUnit
SNVT_switch	nviTotalOnOff
SNVT_temp_p	nviTotalTemp

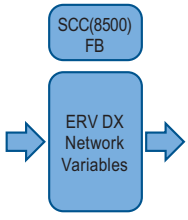

General Function Block	
SNVT_Switch	nvoTempUnit

Control	
On/Off	Operation Mode
Lock	Temperature
Fan Level	Heater
Humidity	Additional Functionality
AC Mode	AC Operation Mode
Temperature Unit	Total OnOff
Total Temperature	

Monitoring	
On/Off	Operation Mode
Lock	Temperature
Fan Level	Heater
Humidity	Additional Functionality
AC mode	AC Operation Mode
Product Type	Product Address
Alarm	Master/Slave
Error Code	Temperature Unit

3.4 Product Description

■ AWHP Objects

① Standard Function Block

Standard Function Block	
SNVT_switch	nviOnOff
SNVT_hvac_mode	nviHeatCool
SNVT_switch	nviLock
SNVT_temp_p	nviSetTemp
SNVT_temp_p	nviLow_HW_Tmp
SNVT_switch	nviIDUrun_HWEn

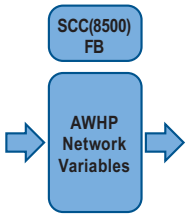

Standard Function Block	
SNVT_switch	nvoOnOff
SNVT_hvac_mode	nvoHeatCool
SNVT_switch	nvoLock
SNVT_temp_p	nvoSetTemp
SNVT_temp_p	nvoLow_HW_Tmp
SNVT_temp_p	nvoUp_Sol_Tmp
SNVT_switch	nvoFilt_Tmpsel
SNVT_switch	nvoIDUrun_HWEn
SNVT_count	nvoPType
SNVT_count	nvoPAddr
SNVT_temp_p	nvoSpaceTemp
SNVT_hvac_status	nvoUnitStatus
SNVT_temp_p	nvoTankTmp
SNVT_temp_p	nvoInTmp
SNVT_temp_p	nvoOutTmp
SNVT_switch	nvoMS_Hwmod
SNVT_count	nvoErrorCode

② General Function Block

General Function Block	
SNVT_switch	nviTempUnit
SNVT_switch	nviTotalOnOff
SNVT_temp_p	nviTotalTemp

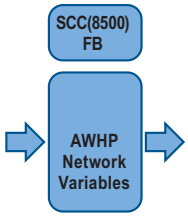

General Function Block	
SNVT_switch	nviTempUnit

Control	
On/Off	Operation Mode
Lock	Temperature
Hot Water Operation	Hot Water Supply Temperature
Solar heat Source Temperature	Temperature Unit
Total OnOff	Total Temperature

Monitoring	
On/Off	Operation Mode
Lock	Temperature
Hot Water Operation	Hot Water Supply Temperature
Solar heat Source Temperature	Temperature Select
Product Type	Product Address
Current Temperature	Alarm
Hot Water Only Mode	Hot Water Tank Temperature
Pipe In Temperature	Pipe Out Temperature
ErrorCode	

■ AHU Objects

① Standard Function Block

Standard Function Block	
SNVT_switch	nviOnOff
SNVT_hvac_mode	nviHeatCool
SNVT_switch	nviLock
SNVT_switch	nviSetRH
SNVT_switch	nviEconEnable
SNVT_switch	nviEmergencySensor
SNVT_temp_p	nviSetTemp
SNVT_lev_percent	nviSpaceRH
SNVT_lev_percent	nviOAD_C
SNVT_lev_percent	nviEAD_C
SNVT_lev_percent	nviMXD_C
SNVT_lev_percent	nviOAD_H
SNVT_lev_percent	nviEAD_H
SNVT_lev_percent	nviMXD_H
SNVT_lev_percent	nviOAD_F
SNVT_lev_percent	nviEAD_F
SNVT_lev_percent	nviMXD_F

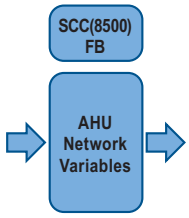

Standard Function Block	
SNVT_switch	nvoOnOff
SNVT_hvac_mode	nvoHeatCool
SNVT_switch	nvoLock
SNVT_switch	nvoSetRH
SNVT_switch	nvoAutoVent
SNVT_switch	nvoEmergencySensor
SNVT_temp_p	nvoSetTemp
SNVT_lev_percent	nvoSpaceRH
SNVT_lev_percent	nvoOAD_C
SNVT_lev_percent	nvoEAD_C
SNVT_lev_percent	nvoMXD_C
SNVT_lev_percent	nvoOAD_H
SNVT_lev_percent	nvoEAD_H
SNVT_lev_percent	nvoMXD_H
SNVT_lev_percent	nvoOAD_F
SNVT_lev_percent	nvoEAD_F
SNVT_lev_percent	nvoMXD_F
SNVT_hvac_status	nvoUnitStatus
SNVT_temp_p	nvoSupplyTemp
SNVT_temp_p	nvoOutdoorTemp
SNVT_temp_p	nvoVentTemp
SNVT_temp_p	nvoMixTemp
SNVT_lev_percent	nvoSupplyRH
SNVT_lev_percent	nvoOutdoorRH
SNVT_lev_percent	nvoVentRH
SNVT_lev_percent	nvoMixRH
SNVT_switch	nvoFilter
SNVT_ppm	nvoSpaceCO2
SNVT_ppm	nvoSpaceVOC
SNVT_lev_percent	nvoOAD_P
SNVT_lev_percent	nvoEAD_P
SNVT_lev_percent	nvoMXD_P
SNVT_switch	nvoSupplyFAN
SNVT_switch	nvoVentFAN
SNVT_switch	nvoHeater
SNVT_switch	nvoHumid
SNVT_count	nvoProductType
SNVT_count	nvoProductAddr
SNVT_count	nvoErrorCode

3.4 Product Description

② General Function Block

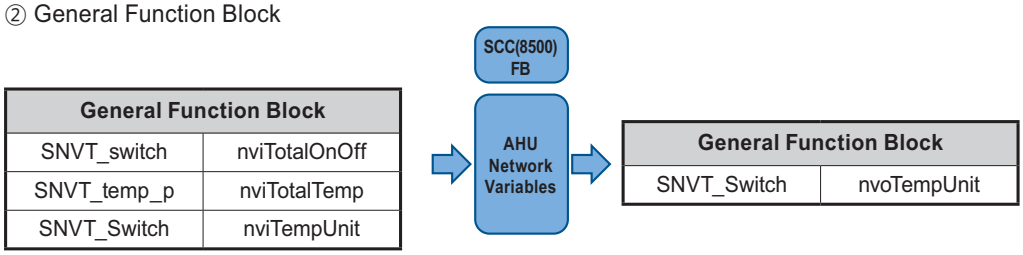

Control	
On/Off	Operation Mode
Lock	Humidification
AutoVent	Emergency Sensor
Temperature	Humidity
Cool OA Damper	Cool EA Damper
Cool MIX Damper	Heat OA Damper
Heat EA Damper	Heat MIX Damper
Fan OA Damper	Fan EA Damper
Fan MIX Damper	Total OnOff
Total Temperature	Temperature Unit

Monitoring	
On/Off	Operation Mode
Lock	Humidification
AutoVent	Emergency Sensor
Temperature	Humidity
Cool OA Damper	Cool EA Damper
Cool MIX Damper	Heat OA Damper
Heat EA Damper	Heat MIX Damper
Fan OA Damper	Fan EA Damper
Fan MIX Damper	Alarm
Supply Temperature	Outer Temperature
Vent Temperature	Mixing Temperature
Supply Humidity	Outer Humidity
Vent Humidity	Mixing Humidity
Filter Clean	CO2 Concentration
VOC Concentration	Current OA Damper
Current EA Damper	Current MIX Damper
Supply FAN	Vent FAN
Heater	Humidification
Product Type	Product Address
Error Code	Temperature Unit

3.4 Product Description

■ .XIF File download

Link → http://www.lonmark.org/certifications/device_certification/product_catalog/search?categoryID=-1&deviceClassID=-1&Submit=Search&manID=825

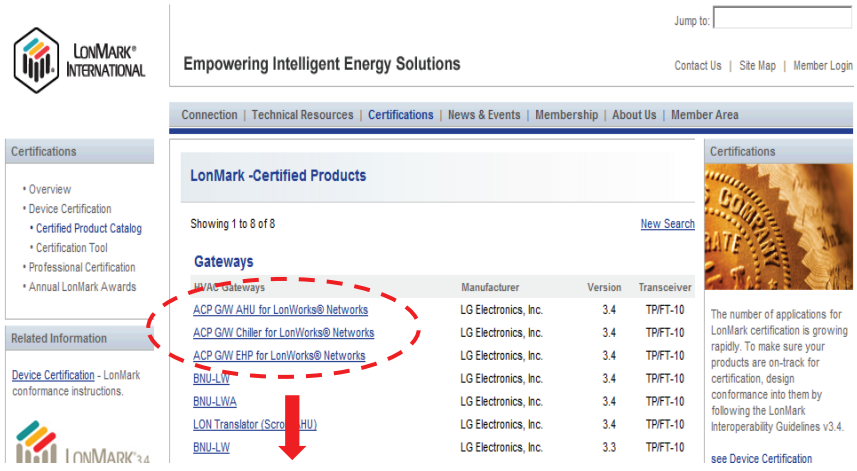

1) Click EHP or AHU

2) Click *.zip file

Each Unit type (EHP, AHU, Chiller) has different .XIF
- LGAC.XIF, LGAHU.XIF, LGChil.XIF

ACP G/W EHP for LonWorks® Networks
- PLNWKB000, PLNWKB100 : under 2.1.0d version

ACP G/W EHP for LonWorks® Networks v2
- PLNWKB000 : 2.1.0e, 2.1.X version
- PLNWKB100 : 2.1.0e, 2.2.X version

ACP G/W AHU for LonWorks® Networks
- All units, All version

3.4.7 AC Manager IV

Up to 32 ACP can be connected so that 8,192 indoor units can be controlled and monitored

- Model name : PACM4B000

3.4.7.1 Specifications

■ Components

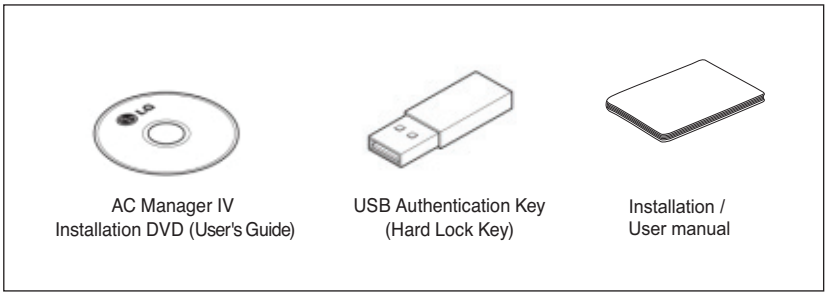

CAUTION

If any product is used other than our standard product and a problem occurs, we don't take any responsibility regarding the problem. Please keep away from using other products.

■ Recommended Specifications

The recommended specifications for the PC of AC Manager IV.

Hardware	
CPU	Dual Core 2.4GHz or faster
System Memory	4 GB or more
Hard Disk Space	100 GB or more
OS	Windows XP/7/8/8.1
Resolution	1280 x 1024 or higher
Recommended Graphics	VGA: For NVidia, Geforce or later. For ATI, Radeon or later
ACP	ACP version 1.1.4p or higher

■ Feature

Model Name	PQCSSA21E0	PACM4B000
Maximum Number of Indoor Units	8,192 (supports 32 ACP)	8,192 (supports 32 ACP IV)
Individual / Group Control	●	●
Ventilation Control	●	●
Individual Controller Lock	● (Temperature / Mode / Fan / All)	● (Temperature / Mode / Fan / All)
Error Check	Self Diagnosis	Self Diagnosis
Mode Change	Cooling / Heating / Auto / Dehumidification / Fan	Cooling / Heating / Auto / Dehumidification / Fan
Schedule	Daily / Weekly / Monthly / Yearly / Exception Day	Daily / Weekly / Monthly / Yearly / Exception Day
Operation History	●	●
Visual Navigation	●	●
Temperature range limit	●	●
Remote Access※	●	●
Auto Changeover	● (1 set)	● (2 set)
Setback	● (2 set)	● (2 set)
Power Consumption Monitoring (with PDI)	●	●
Interlock Control	●	●
Virtual Group Control		●
Emergency Alarm Display	-	●
ACS I/O Module Interlocking	-	●

※ Assignment of public IP address is required to access central controller through internet.

3.4.7.2 Installing AC Manager IV

■ System Diagram

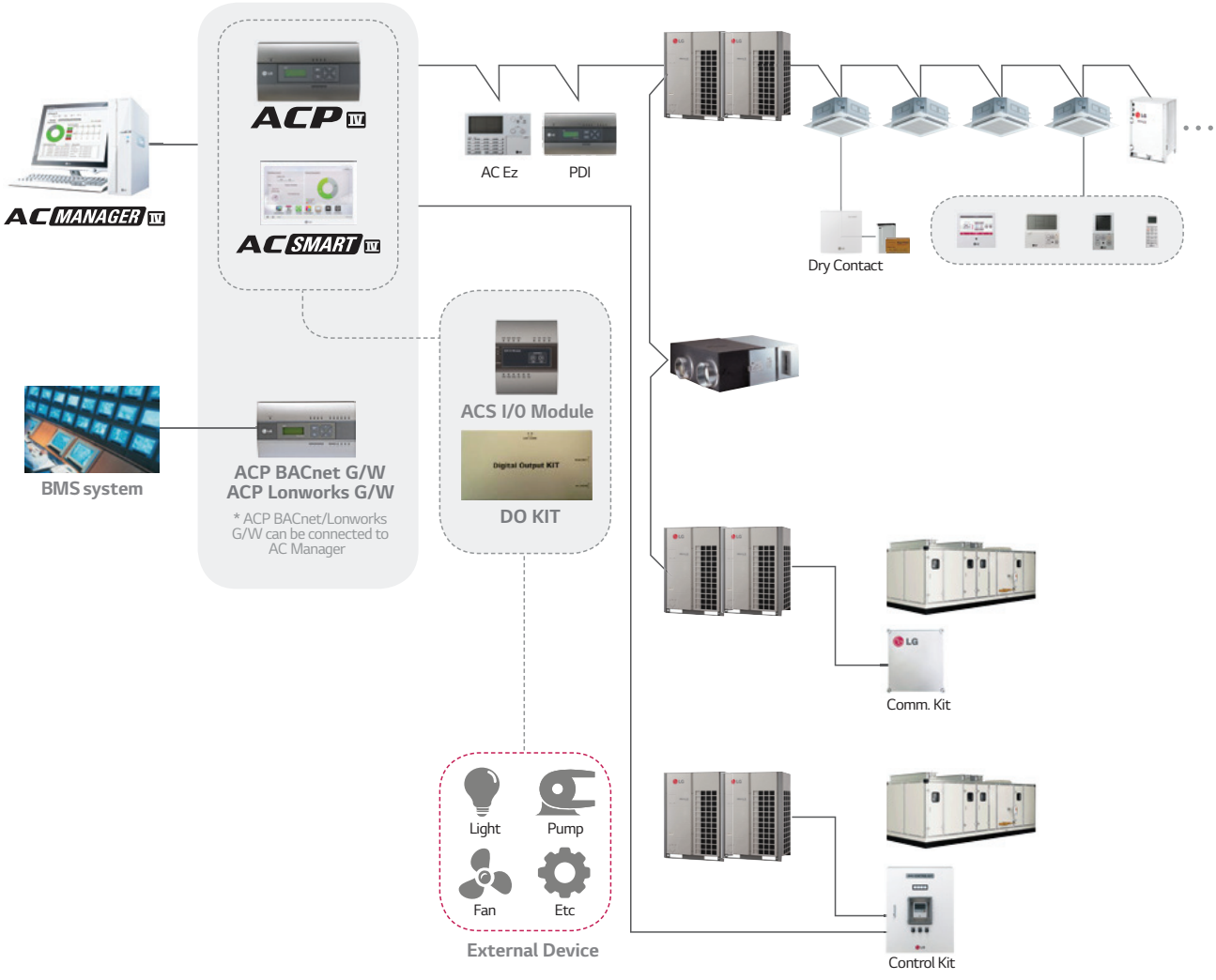

3.4 Product Description

■ Server & Client

AC Manager has Server and Client structure

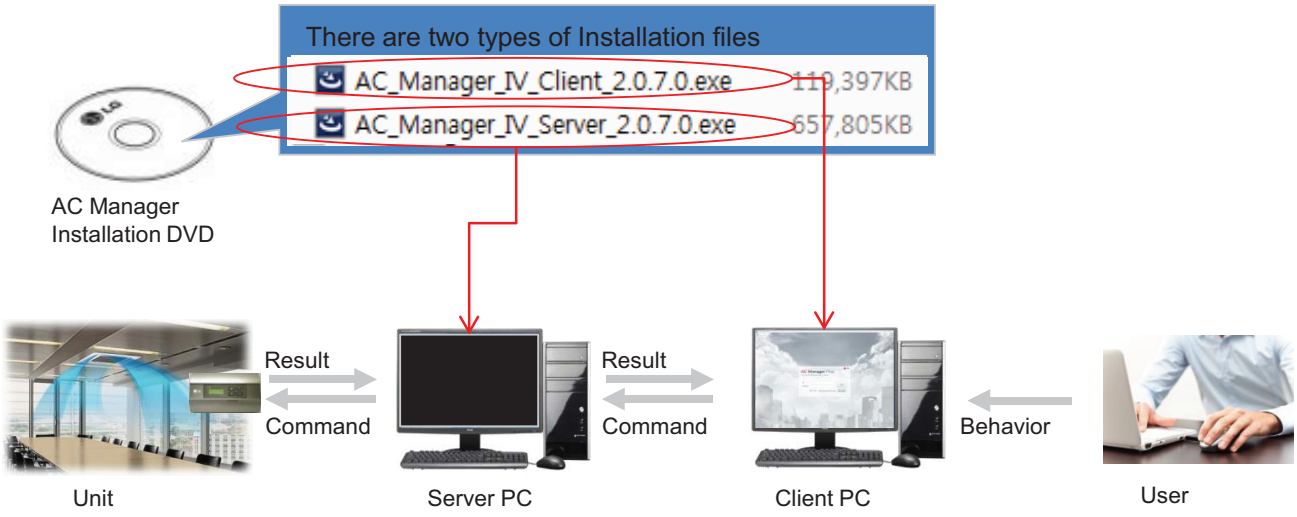

Server
- Invisible middleware running in background
- Core program to control and manage the units
- Server has to be unique in one site.

Client
- Visible interface application for user
- It is a mediator between User and Server
- Maximum 3 clients are allowed in one site

3.4 Product Description

Control in multiple place through Server/Client Structure

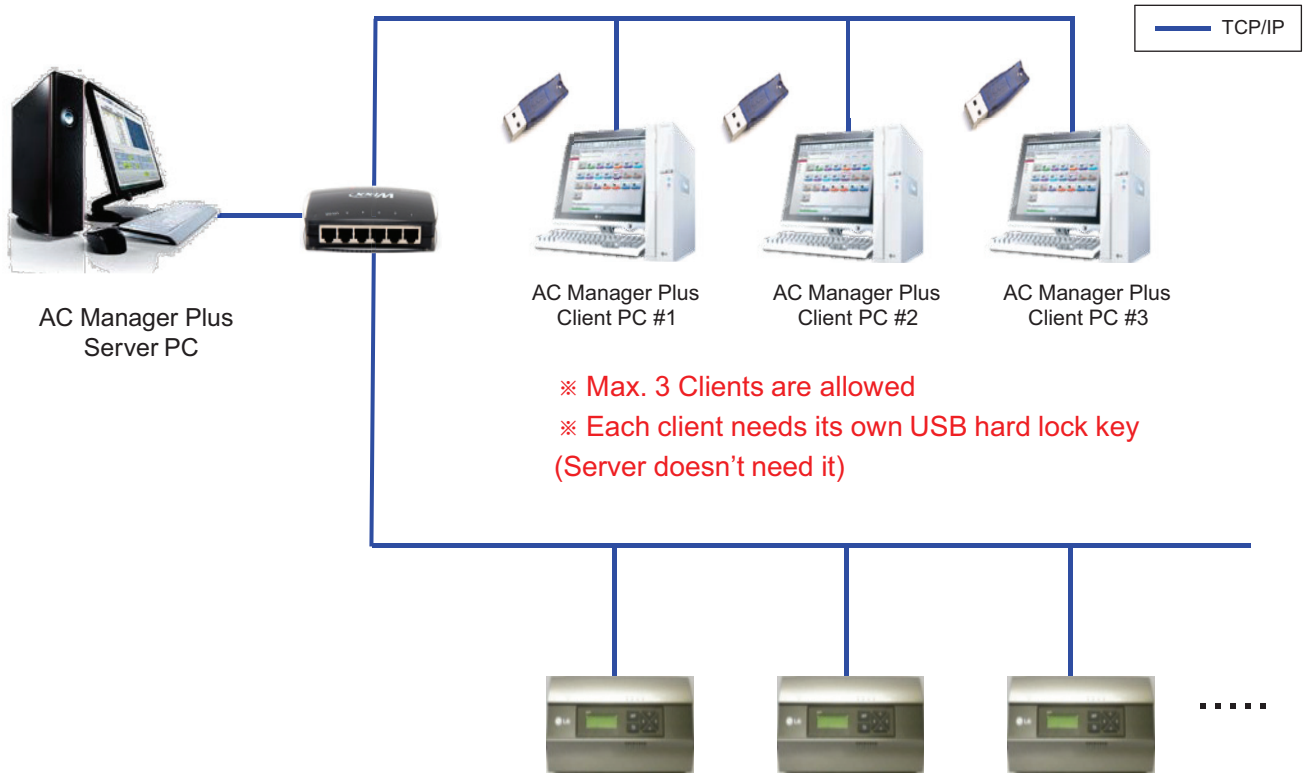

3.4 Product Description

Usual Case : Server and Client in one PC

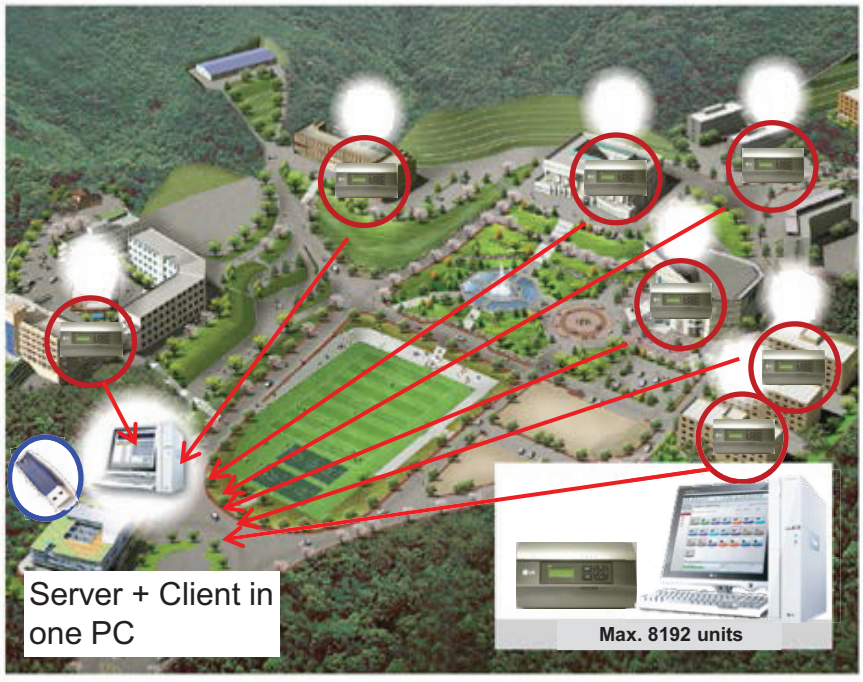

Applied Case : 1 Server and 2 Clients in two places

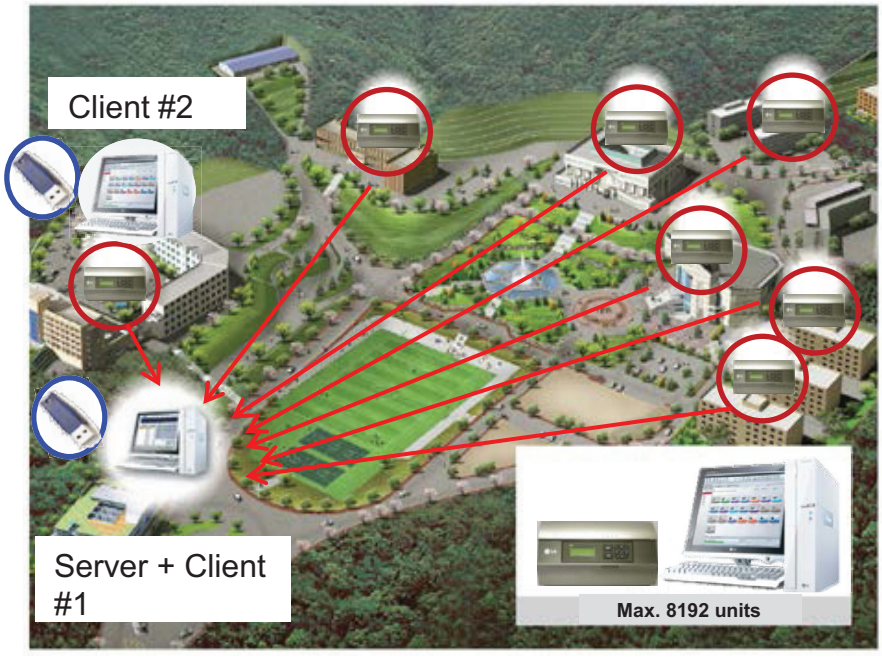

3.4.8 AC Manager 5

AC Manager 5 is a central controller that can manage individual or group of maximum of 8192 units in one space.

AC Manager 5 can monitor or control the units installed in each room of a building from a place such as building management office or school administration office.

■ Environment Setting Function using External Buttons

AC Manager 5 can set the following functions using the externally mounted buttons.

- Network Environment (IP Address, Netmask, Gateway) Setting
- SW Upgrade Function
- Data Backup Function
- Data Recovery Function

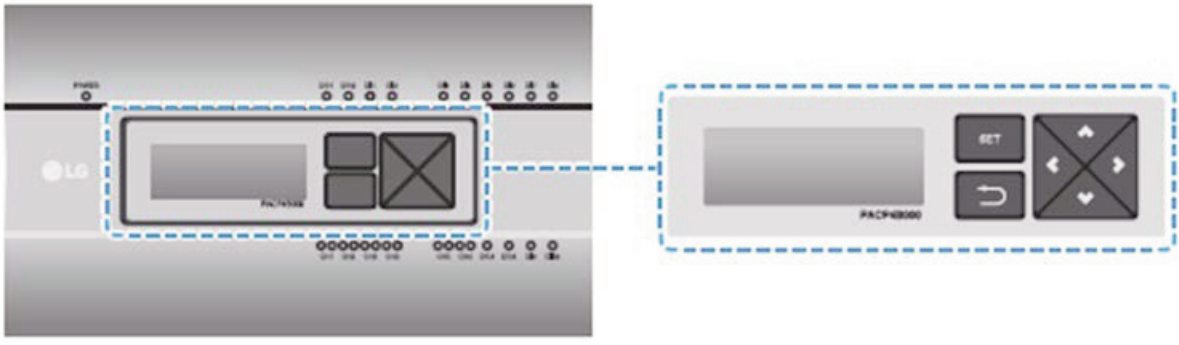

■ Web Server Embedded Function

Without installing a separate program, you can use web browser to input IP address of AC Manager 5 in the address window to access AC Manager 5 web server for device control and monitoring.

- Control of Max. of 8192 air conditioner units (32 central controller)
- Error and Operation Status Monitoring
- Peak/Demand Power Control
- System Setting Function

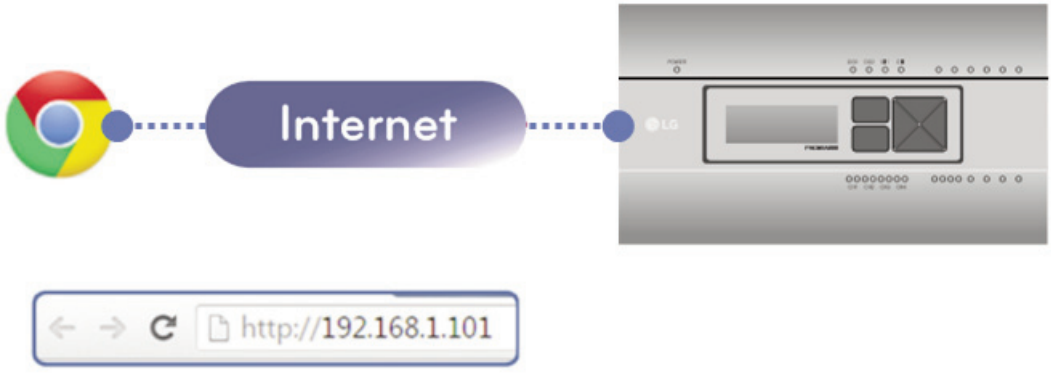

3.4 Product Description

■ Devices that can be interfaced

The devices of AC Manager 5 that can be interfaced are as follows.

Product type	Interfacing product	Remark
Central controller	ACP Standard	It shal'l be connected to AC Manager 5 through TCP/IP
	ACP Premium	It shall be connected to AC Manager 5 through TCP/IP
	ACP IV	It shall be connected to AC Manager 5 through TCP/IP
	AC Smart Premium	It shall be connected to AC Manager 5 through TCP/IP
	AC Smart IV	It shall be connected to AC Manager 5 through TCP/IP
	ACP Lonworks	It shall be connected to AC Manager 5 through TCP/IP
	ACP BACnet	It shall be connected to AC Manager 5 through TCP/IP
Remote control	PC	Needs web browser supporting HTML5
	Tablet PC	Needs web browser supporting HTML5
	Smart Phone	Needs web browser supporting HTML5

■ Components

The components of the following figure are included in AC Manager 5 package box.
Open the package box, and check if all corresponding components are included.

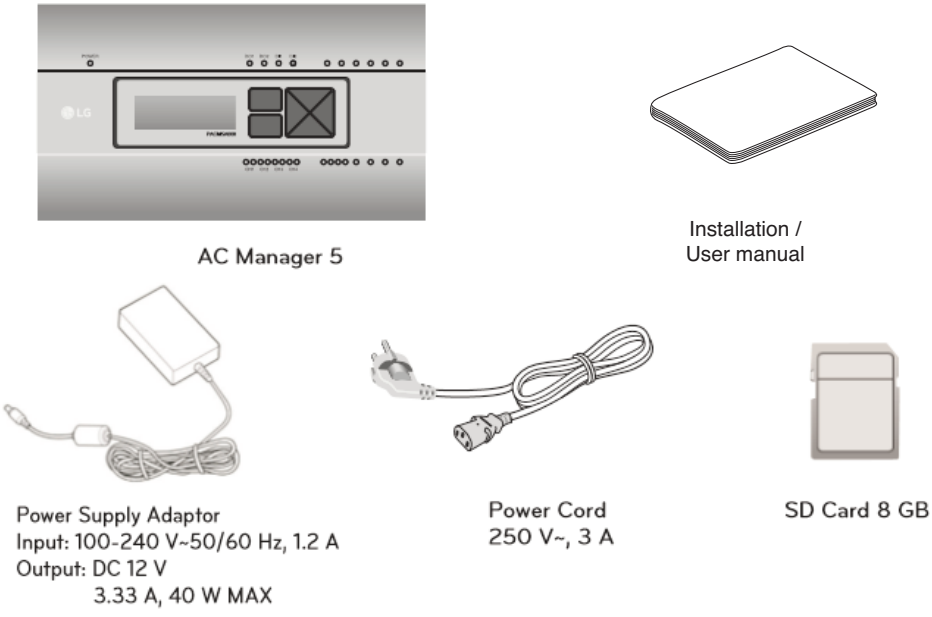

3.4 Product Description

■ Name of Each Part

AC Manager 5 is composed as the following form.

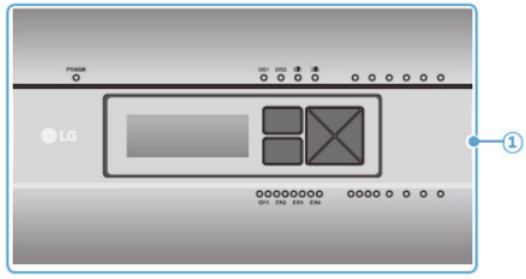

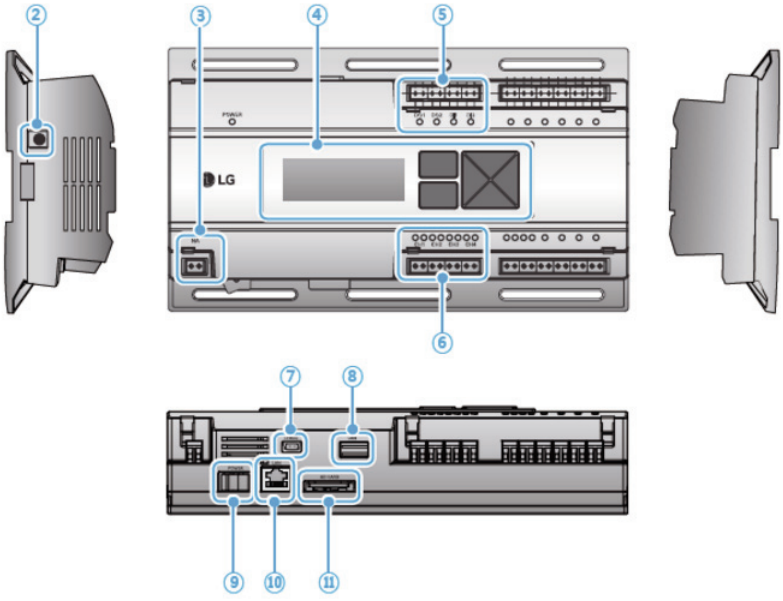

Number	Interfacing product	Remark
①	Cover	Front cover of AC Manager 5
②	Adaptor connection jack	Jack for 12 V⎓ to connect to the power supply adaptor
③	Power port	24 V~ port for power connection (not supported by 12 V⎓ model)
④	Buttons and LCD	Buttons and LCD to set network environment and to display other information
⑤	Basic external input/output signal connectors	Reserved (DI: 2EA, DO: 2EA)
⑥	RS485 communication port	Reserved (total 4EA)
⑦	Mini USB port	USB to Serial port for software debugging
⑧	USB port	For software update and data backup
⑨	Power switch	Switch to turn on or off the power of AC Manager 5
⑩	Ethernet port	Ethernet port to connect to internet
⑪	SD card slot	For data backup

3.4 Product Description

■ System Structure

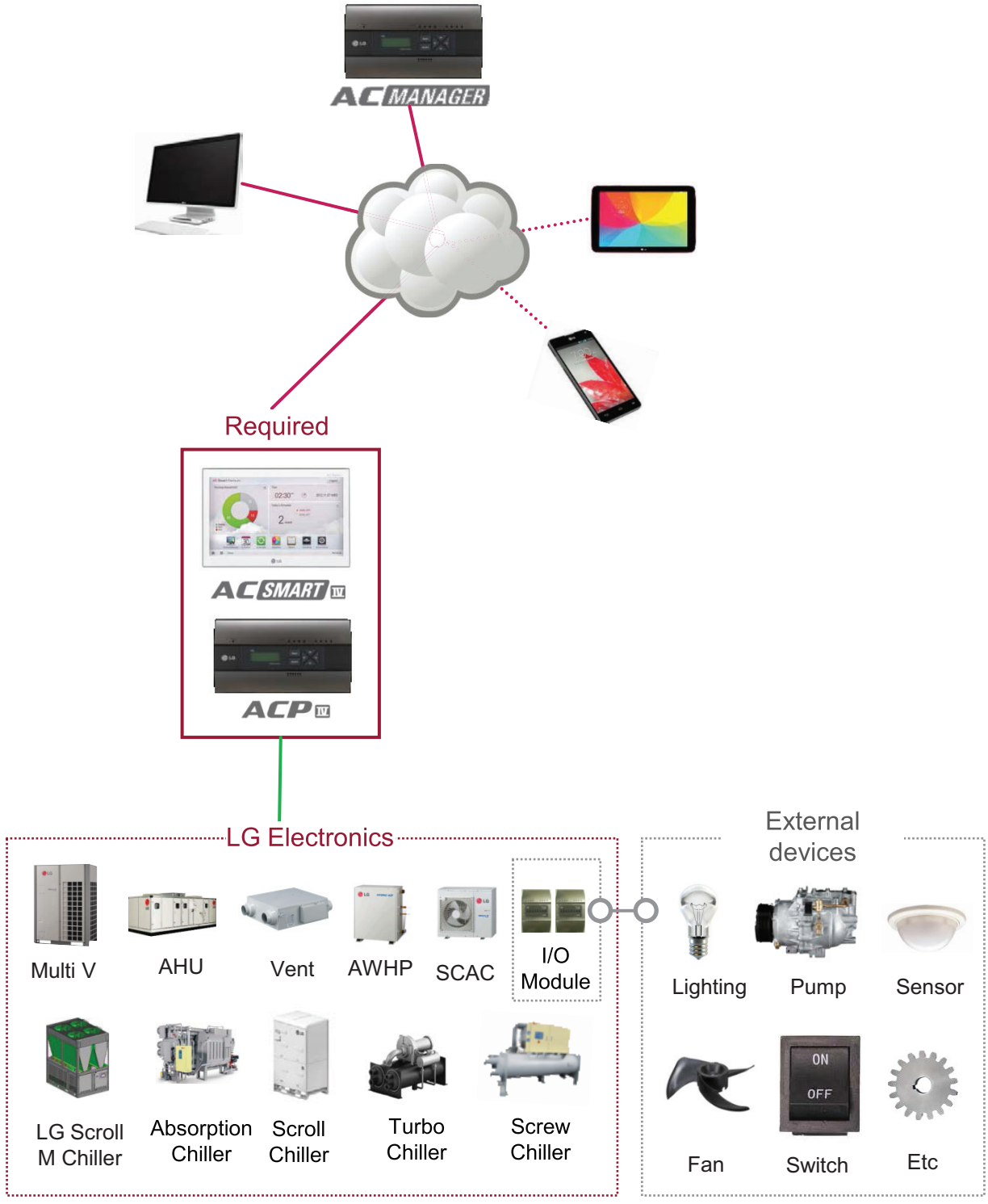

3.4 Product Description

■ Hardware Specification

Category	Description
Boundary of usage temperature	0°C~40°C
Rated Voltage	12 V⎓
Rated Current	Max 2.3A
Communication ports	• Ethernet 10 / 100 BASE-T • USB : USB Host (SW upgrade, data backup) • RS485 communication ports 6EA • SD card slot (RS485 communication logging) • RS-232 Console Port (HMI)
External input/output ports	DI, DO
LED	13 EA (Power and communication status) 14 EA (Reserved)
LCD	20 ×4 Character-LCD (network environment setting and information display)

■ Order of Installation

To use AC Manager 5, it shall be installed in the following order.

STEP 1. AC Manager 5 Installation and Cable Connection
Install AC Manager 5 and connect network and other cables.

STEP 2. AC Manager 5 Network Address Setting
Set network address to be able to access AC Manager 5 through internet.

STEP 3. Central Controller (ACP, AC SMART) Information Input
Input and save device information in Web GUI, which is AC Manager 5 operating program.

STEP 4. Check Web GUI Control/Monitoring
Access to Web GUI, which is AC Manager 5 operating program, and check if control/monitoring are properly carried out.

NOTE

• AC Manager 5 Installation
AC Manager 5 installation work requires specialized technique. Therefore, the installation contents mentioned in this chapter must be carried out by installation technician with qualification.
For questions and requests with regard to the installation, please contact the service center or installation specialty store approved by LG.

3.4 Product Description

■ Fixing to Wall

AC Manager 5 can be installed by fixing to the wall.
To install AC Manager 5 in adequate place, proceed according to the following instructions.
Here, it describes the installation method of AC Manager 5 with the example of installing AC Manager 5 on the wall.

- Decide the space to install AC Manager 5.
  Before installing AC Manager 5, check if it is an adequate place for the connection of AC Manager 5, power, and LAN cable.
- Use driver to fix on the wall. According to the installation location, you can fix it as in the following figure.

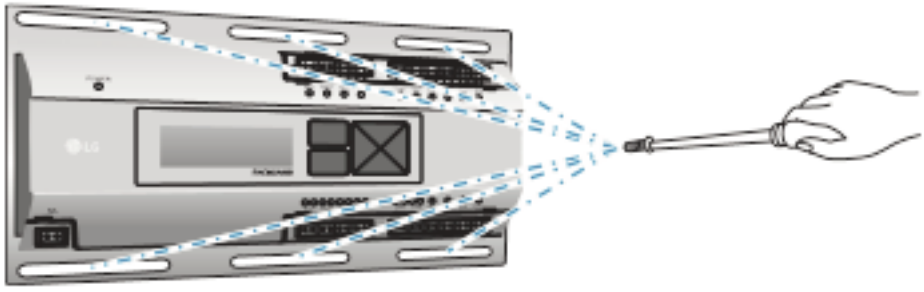

■ Mounting on DIN RAIL

AC Manager 5 can be installed in DIN RAIL with width 35 mm and height 7.5 mm. To install AC Manager 5 in adequate place, proceed according to the following instructions. Here, it describes the installation method with the example of installing on DIN RAIL.

- Decide the space to install AC Manager 5.
  Before installing AC Manager 5, check if it is an adequate place for the connection of AC Manager 5, power, and LAN cable.
- Install DIN RAIL.
- Hook the top part of AC Manager 5 on DIN RAIL.
- Push the main body of AC Manager 5 until you hear the sound of installation.
- Pull AC Manager 5 to check if it is fixed.

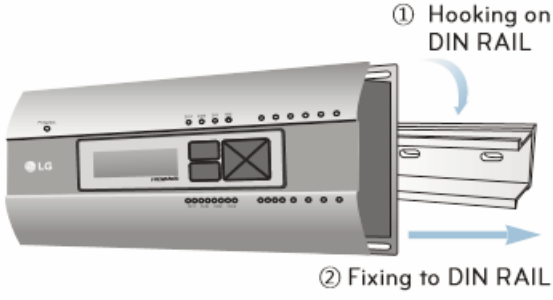

NOTE

- After installing to DIN RAIL, do not fix to the wall using screws. AC Manager 5 may be damaged.
- DIN RAIL fixing screw spec: M3, screw head height 1.75 ~ 2.0 mm, screw head diameter 5.5~7.0 mm.

■ Connecting Ethernet Cable (LAN cable)

You need to connect Ethernet cable to AC Manager 5. AC Manager 5 can be connected to hub or ACP through Ethernet cable.

It is the case of connecting AC Manager 5 to the basic internet network installed at the site, and it is connected to general hub. Use Ethernet cable to connect to AC Manager 5's LAN port.

For this initial Ethernet connection, you can use either:

- An Ethernet patch cable connected directly between your PC and the AC Manager 5 (if your PC Ethernet port is not “auto-sensing”, you will need an Ethernet crossover cable), or
- A normal LAN connection, meaning that both your PC and the AC Manager 5 are physically connected to the same Ethernet hub or switch.

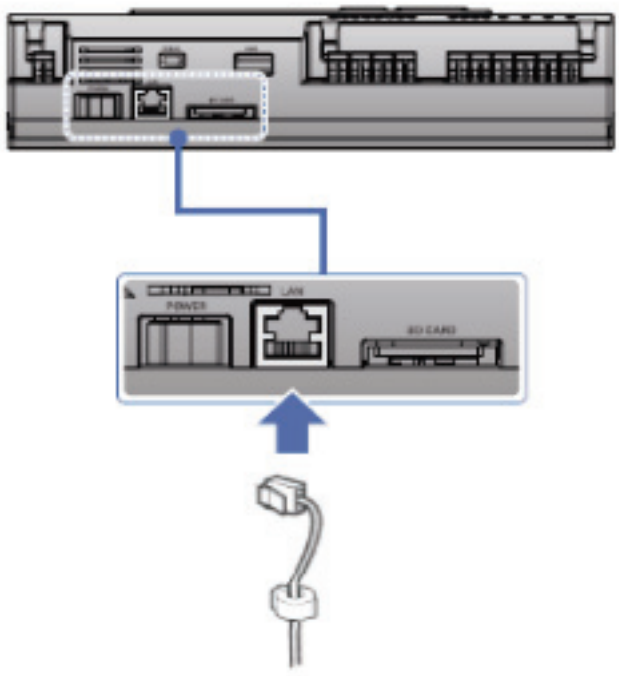

3.4 Product Description

■ LCD Environment Setting

The network environment of AC Manager 5 can be set by the LCD and the buttons at the front side of AC Manager 5. The current AC Manager 5 information and the menu are displayed on the LCD, and you can press , button and [▲], [▼], [◀], [▶] buttons to change and select menu.

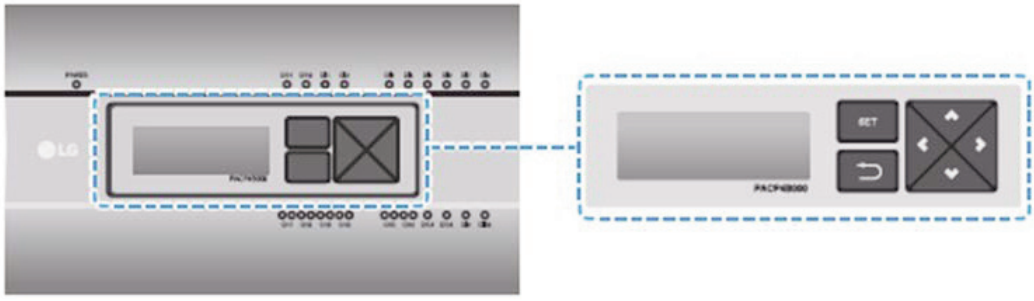

When you press AC Manager 5's [SET] button, it enters Environment Setting mode. When you press [SET] button for the first time, the menu to set the IP address is displayed as shown below.

```
> Network Info
  Function
```

Press [▲], [▼] button to locate the arrow on the desired function.

- Select [Network Info], and press [SET] button to enter No.1 menu in the following figure. In [Network Info] menu, input the network information such as AC Manager 5's IP address.
- Select [Function], and press [SET] button to enter No.2 menu in the following figure. In [Function] menu, it supports AC Manager 5's software service functions.

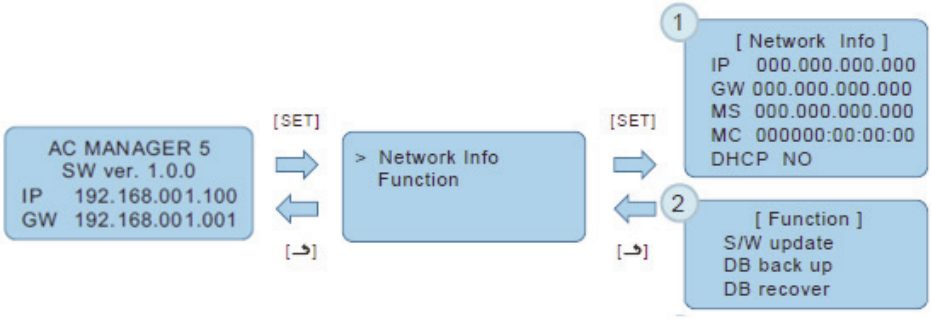

NOTE

- [Function] menu is used by the system air conditioner service technician, and user shall not use this function. If this function is used incorrectly, it may cause failure of AC Manager 5.

■ Network Address Setting Method

In [Network Info] menu, select the category to set using [▲], [▼] button.
In the first screen on [Network Info] menu, IP, Gateway, and Netmask settings are displayed, and you can use [▼] button to check MAC address and DHCP setting.

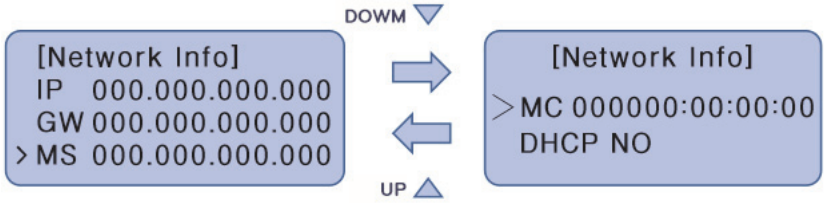

To change the network setting, locate the arrow on the corresponding setting position and press [SET] button to enter the corresponding setting screen.

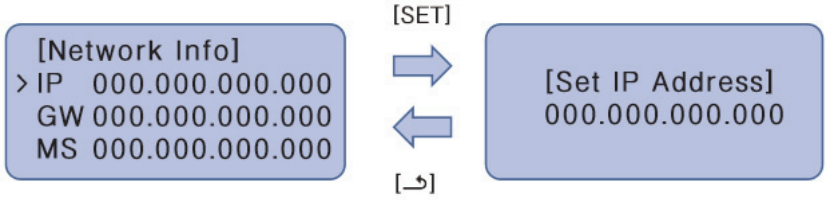

The network address consists of four 3-digit numbers. In case of setting the network address, the, name of the related address is displayed on the LCD of AC Manager 5, and you need to press [▲], [▼], [◀], [▶] button for the setting.

When you press [▲], [▼] button, the number of the digit where cursor is on increases/decrease, and when you press [◀], [▶] button, it moves to the left/right digit of the network address.

Example of pressing [▼] button

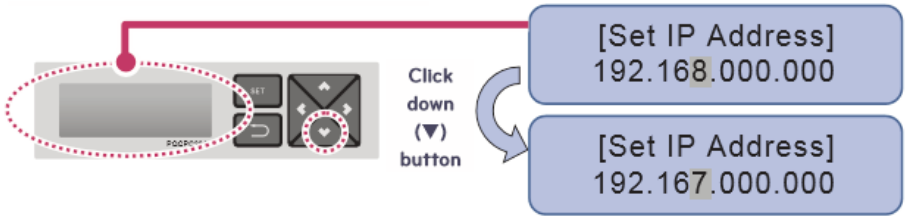

Example of pressing [▶] button

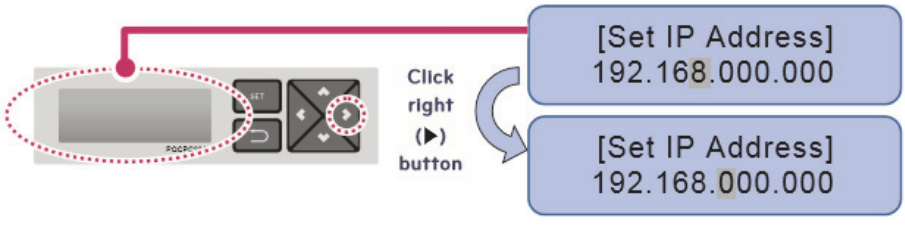

NOTE

- Network Address Setting
  The network address can be separated to 4 digits based on '.', and each number shall be 255 or less. Number exceeding 255 may not be input.

NOTE

Assigning Network Address

- Network shall be assigned by the person in charge of the network of the corresponding site. (IP address, Gateway address, Netmask)
- AC Manager 5 can use both fixed IP type and dynamic IP type, but fixed IP type is recommended, and if dynamic IP type is used, it may cause inconvenience to the user.
- When fixed IP type is used, you need to receive network (IP address, gateway address, Netmask) from the person in charge of the network of the corresponding site.

■ IP Address Setting

For user to use the functions of AC Manager 5 through the web, a unique IP address may be assigned to AC Manager 5 or dynamic IP setting may be used.

The next is how to set fixed IP address. Please proceed according to the order.

1. Press AC Manager 5's [SET] button. The following menu screen will be displayed.
   - When you press [SET] button again, [Network Info] setting screen is displayed.

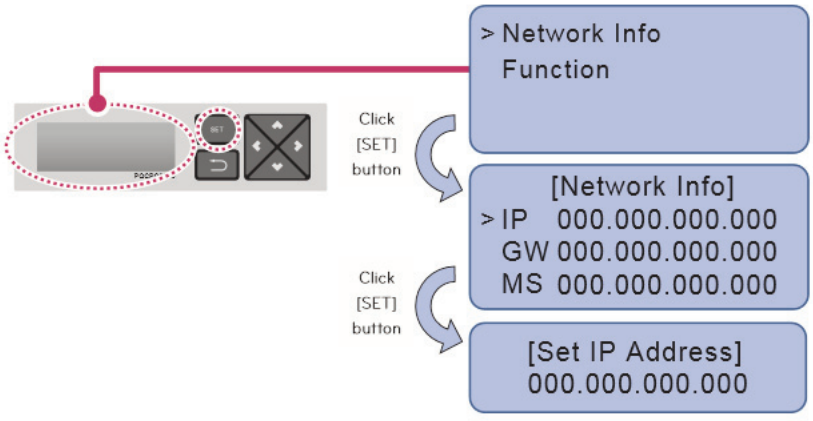

2. While IP is selected, if you press [SET] button, screen to input IP address is displayed.

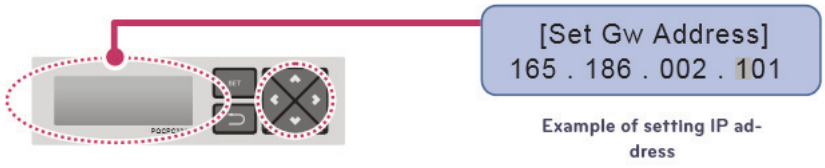

Example of setting IP address

■ Using Dynamic IP with DHCP

For user to use the functions of AC Manager 5 through the web, a unique IP address may be assigned to AC Manager 5 or dynamic IP setting may be used.

The next is how to set dynamic IP address. Please proceed according to the order.

1. Press AC Manager 5's [SET] button. The following menu screen will be displayed.
   - When you press [SET] button again, [Network Info] setting screen is displayed.
   - While DHCP is selected, if you press [SET] button, you can input whether to use DHCP function.

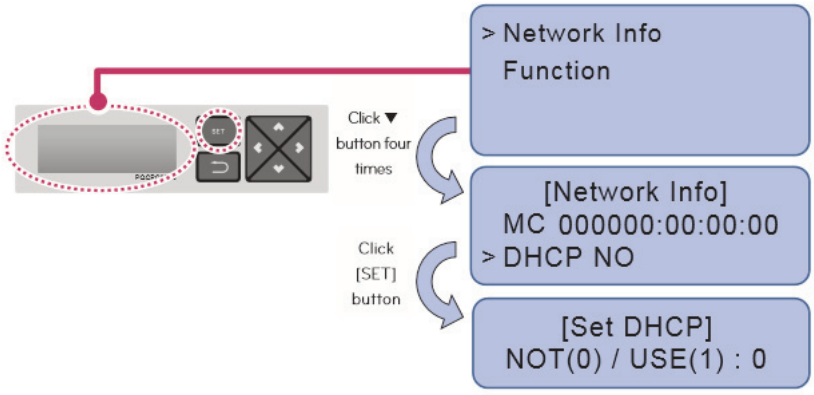

2. Use [▲], [▼] button to set whether to use DHCP function.
   When you press [▲] button, DHCP function is set to use, and when you press [▼] button, DHCP function is set to no-use.
3. To use dynamic IP, set to use DHCP function.

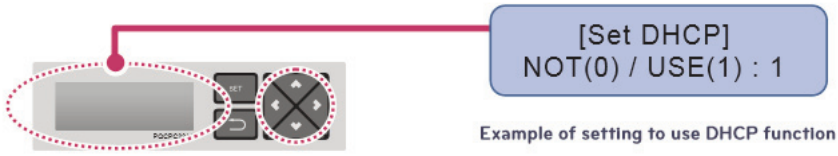

Example of setting to use DHCP function

NOTE

- When dynamic IP type is used, the IP in use is returned to DHCP server, and you may not be able to access AC Manager 5. In such case, you can check newly set IP address in the front LCD of AC Manager 5.

3.4.9 PDI

When using an air conditioner outdoor unit at the efficiency apartment or multipurpose building in common, power consumption of each air conditioner indoor unit can be displayed for efficiency management.

3.4.9.1 Specifications & Dimensions

- Model name : PQNUD1S40(PDI Premium)
PPWRDB000 (PDI Standard)

■ Components

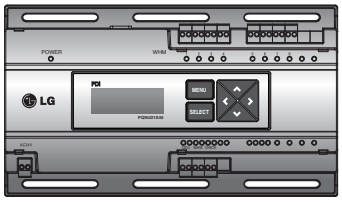
Power indicator


Power supply

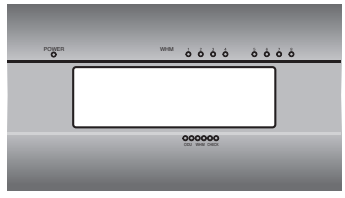
Front cover


1 core

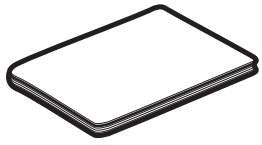
Manual


10 screws (M4X12mm)

■ Product Specifications

Categories	PDI Premium	PDI Standard
Power Supply	220-240 V~ 50/60 Hz 1Ø	220-240 V~ 50/60 Hz 1Ø
Max IDUs	128	128
Max ODU	8EA (EHP ODU) / 4EA (GHP ODU)	2EA(EHP ODU)/1EA(GHP ODU)
Controlled Product type	Air Conditioner, ERV DX, Hydro-kit	Air Conditioner, ERV DX, Hydro-kit
Connectable Wattmeter	Pulse : 8 / 485 type : 1	Pulse : 2
LCD Display	4 Lines	4 Lines
LED Display	Power/Comm./Pulse status	Power/Comm./Pulse status
IP rating	IP20	IP20

■ Dimensions

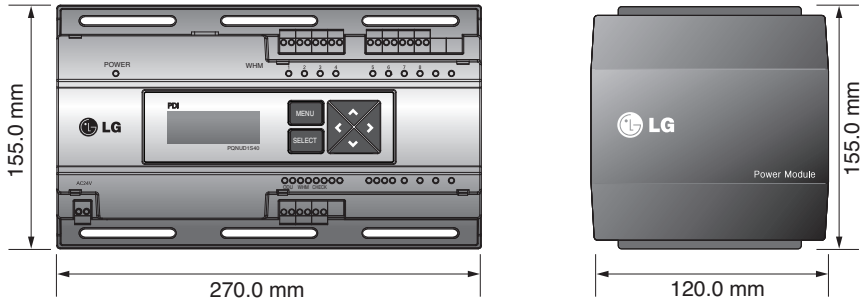

3.4.9.2 Field Wiring Diagram

When interlocked to pulse type wattmeter

- **When interlocked to EHP product**
  - Independent Operation of Power Indicator (interlocked to EHP products)

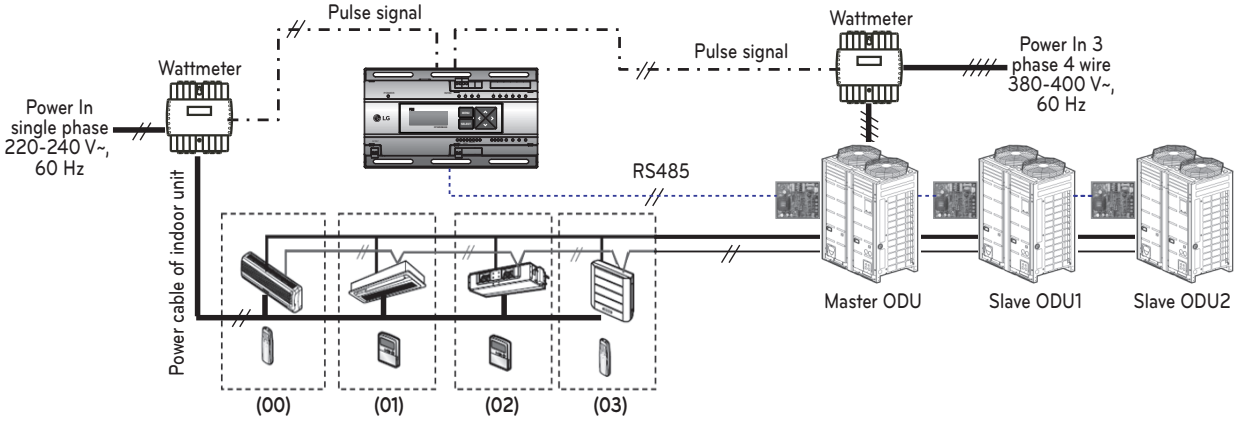

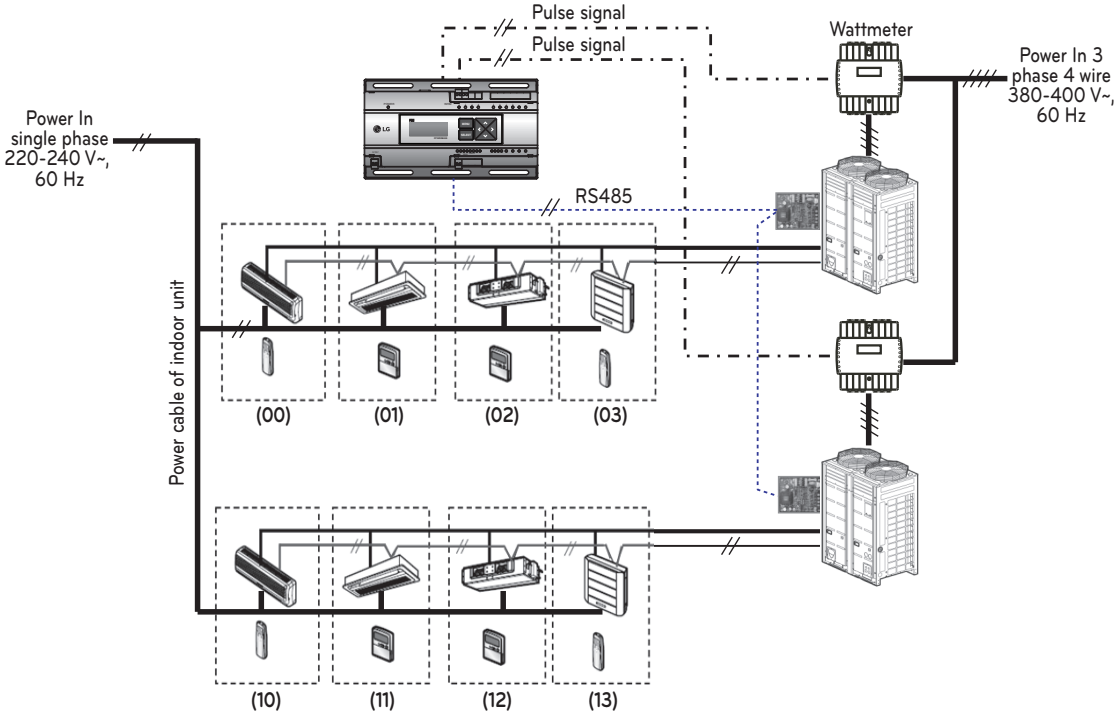

//////	: Power cable for 3 phase 4 wire
//	: Power cable for single phase
····//·····	: Communication cable (2 wire shielded cable): Between outdoor unit and central controller
— // —	: Communication cable (2 wire shielded cable): Between indoor unit and outdoor unit
– ·// · ·	: Pulse signal wire
━━	: Refrigerant pipe

3.4 Product Description

CAUTION

- Depending on the electric power, use the wattmeter for remote reading by sending the pulse signal.
- Use the wattmeter with the pulse width of 50 - 400 ms.
- The wattmeter pulse must be able to sink at least 3mA or more of current in the power indicator.
- Use the wattmeter of 1W/pulse, 2W/pulse, 4W/pulse, 6W/pulse, 8W/pulse, 10W/pulse, 100W/pulse and PT/CT (1-50,000).
- When setting the wattmeter, set it to Master Mode.
- Maximum of 8 wattmeters can be installed.
- The distance between power indicator and wattmeter should be shorter than 10m in normal circumstance.
- When electrical or mechanical noise is expected, more shorter wiring is needed.

❊ EHP (Electric Heat Pump): It is an electric air conditioner to drive the compressor by electric power.

3.4 Product Description

• **Interlocked Operation with Central Controller (interlocked to EHP product)**

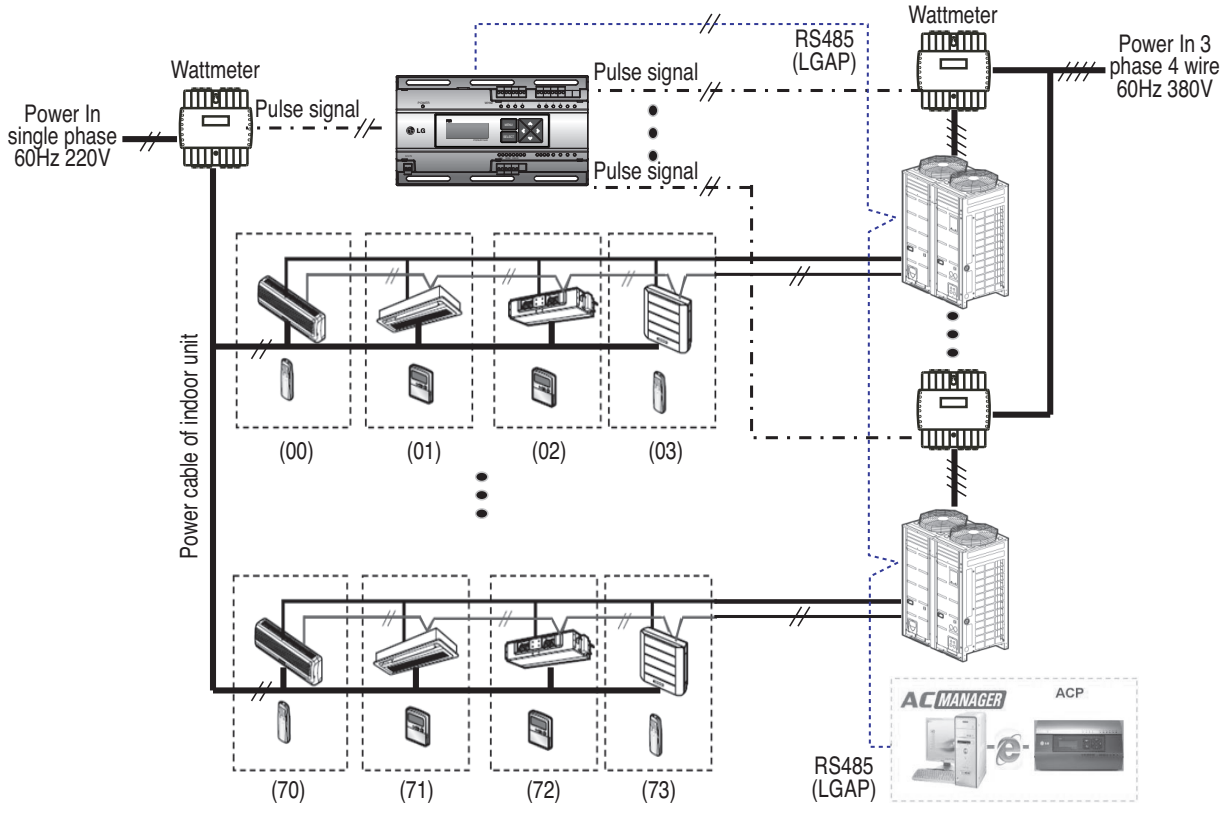

//////	: Power cable for 3 phase 4 wire
//	: Power cable for single phase
····//·····	: Communication cable (2 wire shielded cable): Between outdoor unit and central controller
—//	: Communication cable (2 wire shielded cable): Between indoor unit and outdoor unit
– ·// · ·	: Pulse signal wire
———	: Refrigerant pipe

CAUTION

- Depending on the electric power, use the wattmeter for remote reading by sending the pulse signal.
- Use the wattmeter with the pulse width of 50 - 400 ms.
- The wattmeter pulse must be able to sink at least 3mA or more of current in the power indicator.
- Use the wattmeter of 1W/pulse, 2W/pulse, 4W/pulse, 6W/pulse, 8W/pulse, 10W/pulse, 100W/pulse and PT/CT (1-50,000).
- When setting the wattmeter, set it to Slave Mode.
- Maximum of 8 wattmeters can be installed.
- The distance between power indicator and wattmeter should be shorter than 10m in normal circumstance.
- When electrical or mechanical noise is expected, more shorter wiring is needed.

3.4.9.3 Installation

How to wire the product (when EHP product is connected)

Wiring Power Indicator

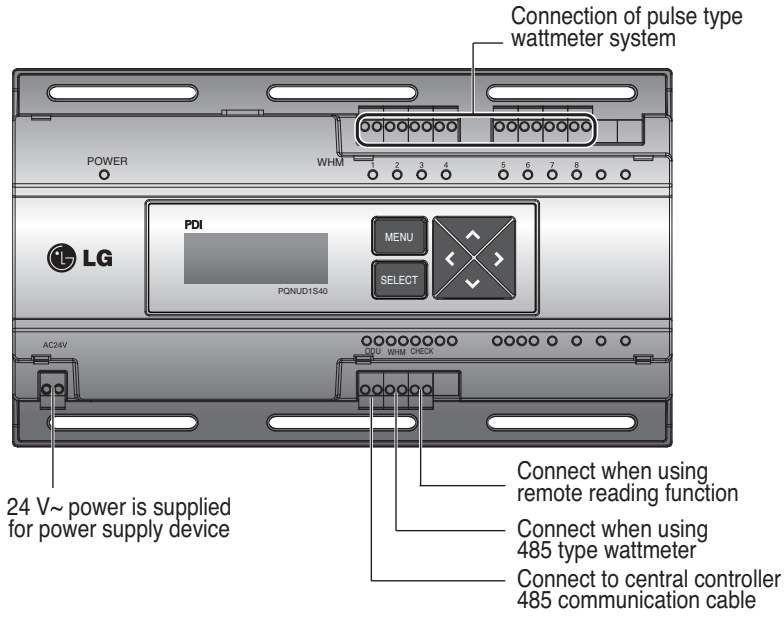

Wiring Power Supply

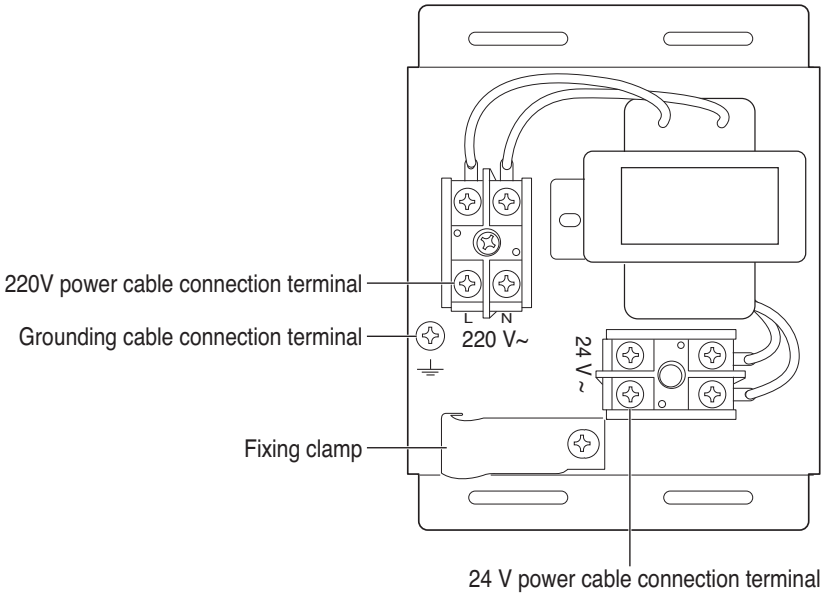

CAUTION

- Power must be turned on after the product is wired completely.

3.4 Product Description

How to wire the product (when GHP product is connected)

Wiring Power Indicator

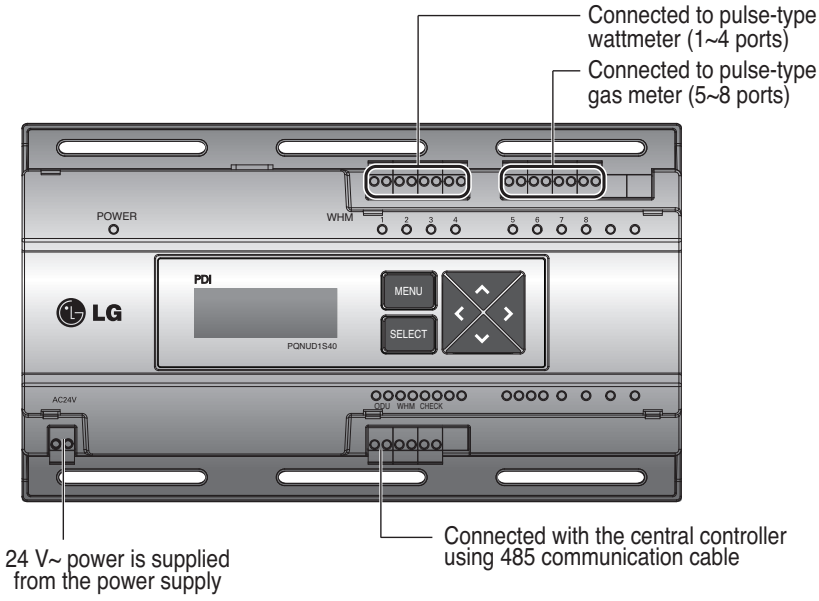

Wiring Power Supply

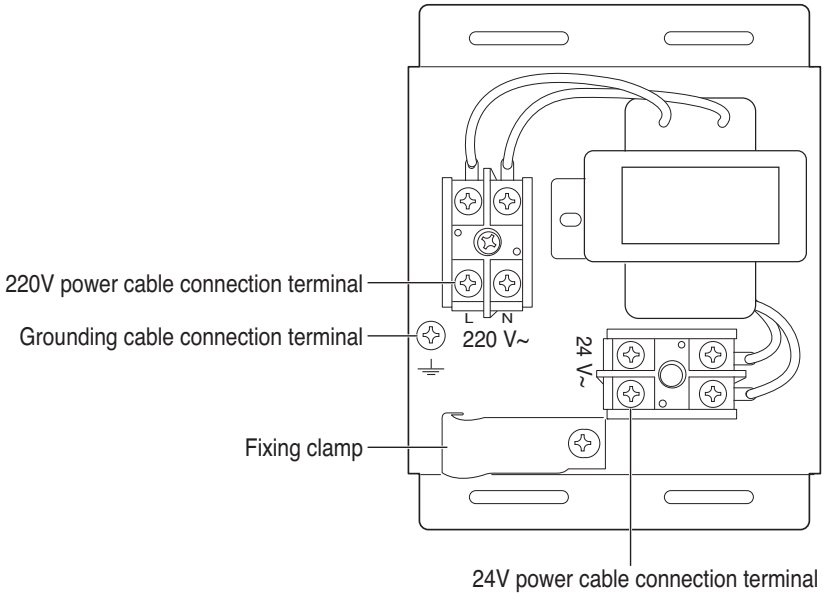

CAUTION

- Power supply must be applied after wiring the product is completed, if applicable.

3.4 Product Description

■ Overview

PDI(Power Distribution Indicator) calculates power consumption of each unit connected to the central controller. Collected data is displayed on the central controller GUI as a report and graph.

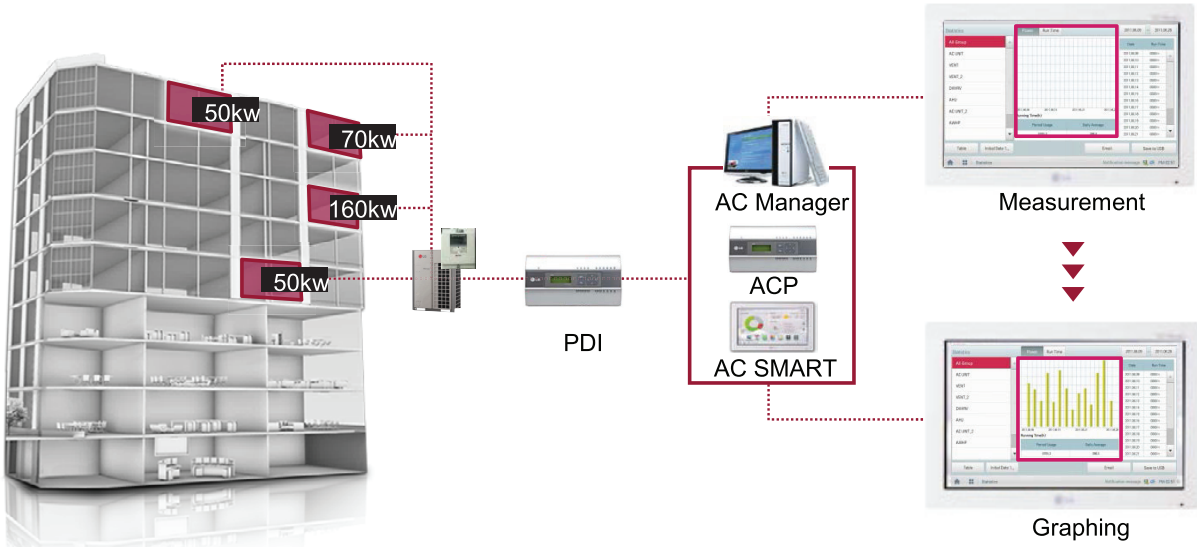

3.4 Product Description

■ Components

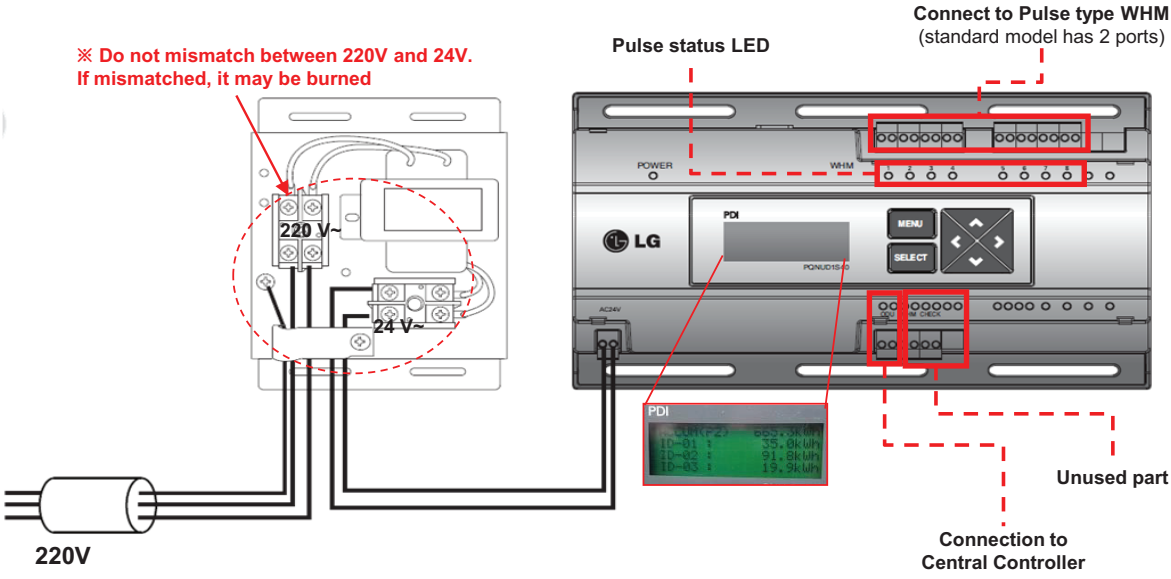

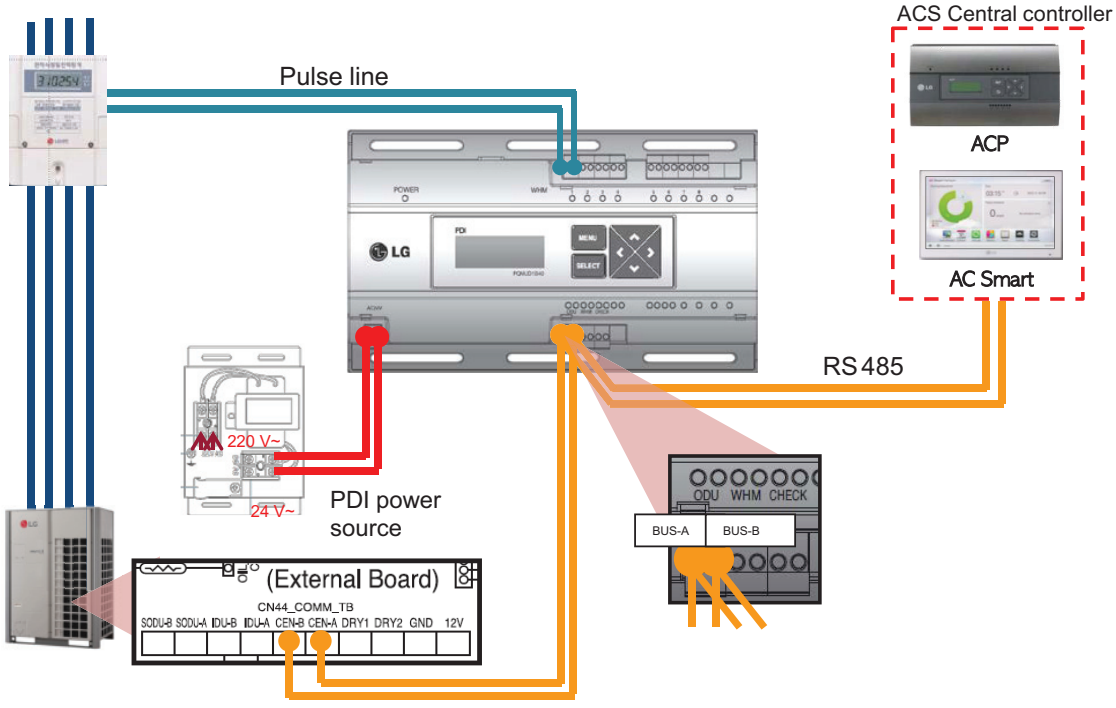

3.4 Product Description

■ Installation – Multiple WHM

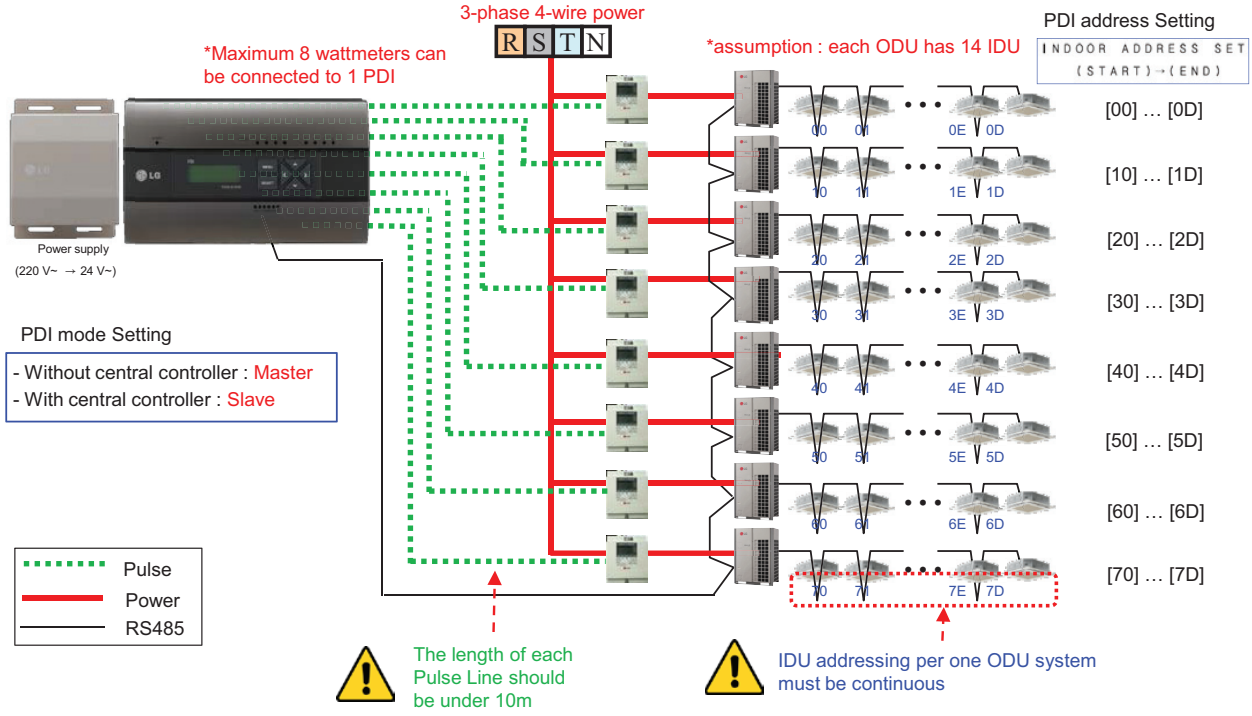

■ Power Distribution display

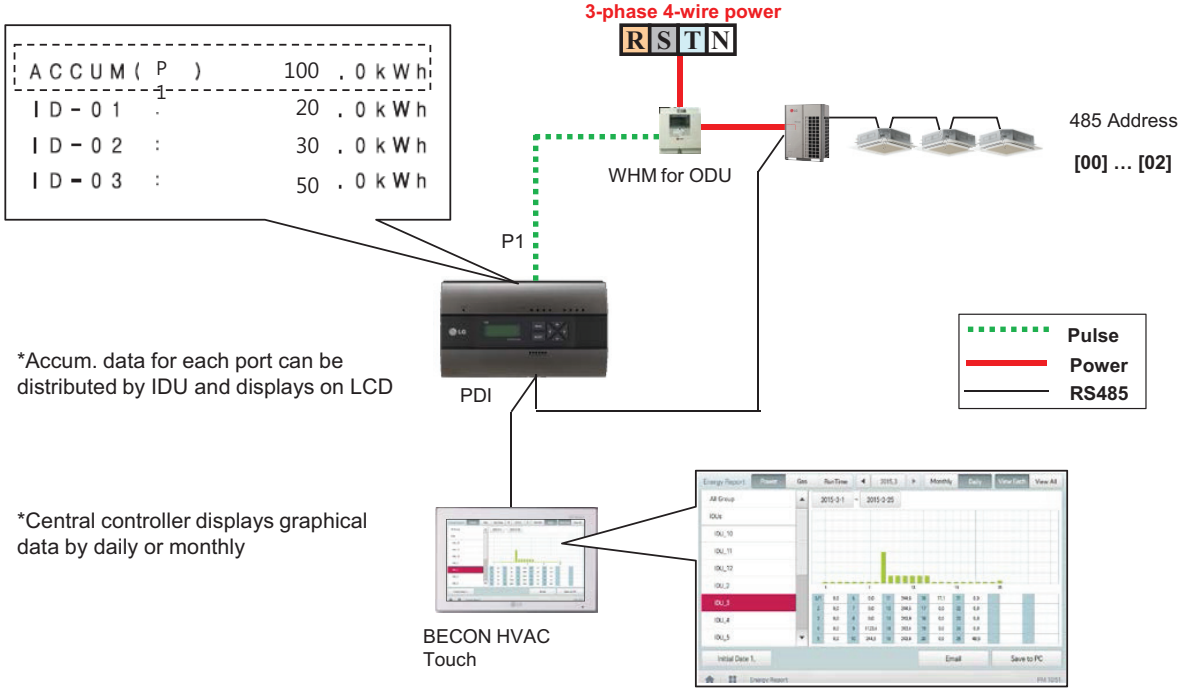

3.4 Product Description

■ Power Distribution – STBP(Stand-by Power)

- Auto STBP : In this mode, PDI distributes the STBP to the each IDU unit equally
- Manual STBP : In this mode, PDI saves separately the STBP in PDI STBP's page

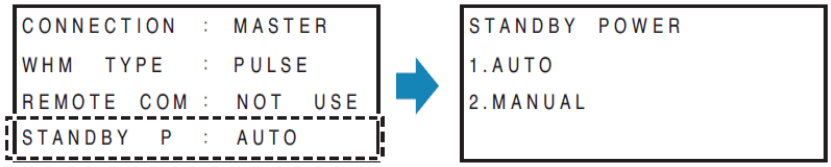

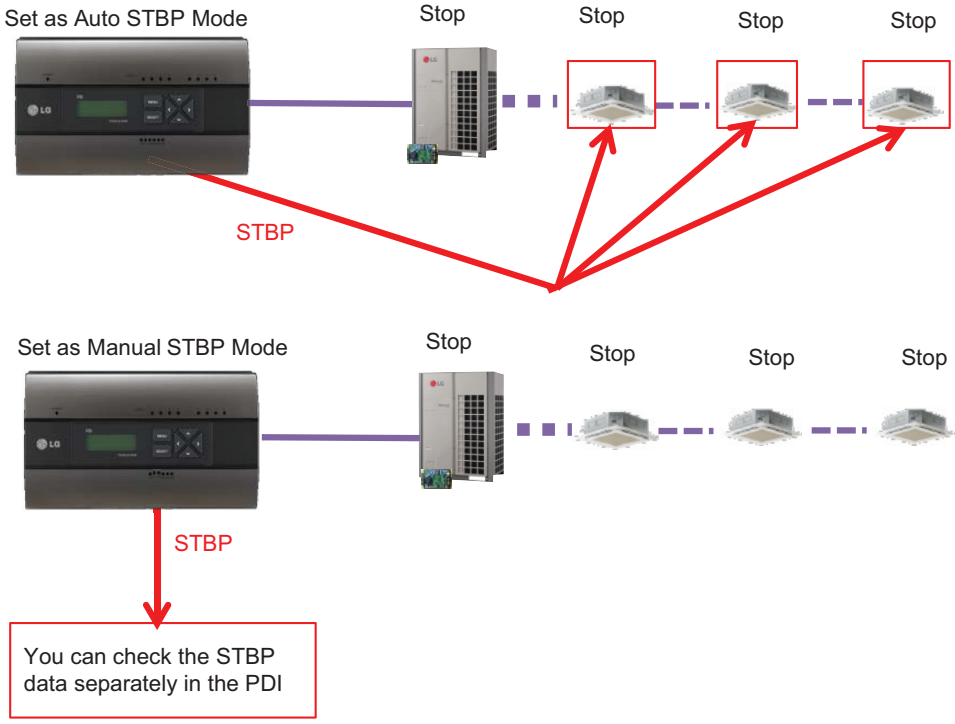

3.4 Product Description

■ Error Display

```
ERROR-01
NO COMMUNICATION
WITH AIRCONDITIONER
IDU ADDRESS [00-07]
```

<Communication error display>

- If there is no communication signal from ODU~IDU for 3 minutes, this error is displayed

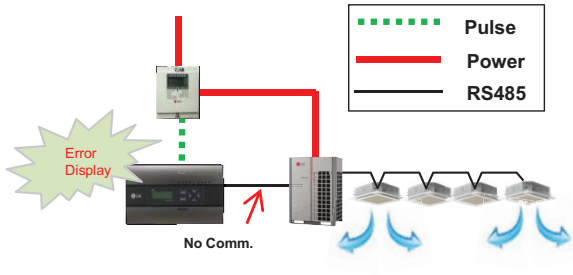


```
ERROR-02

NO SIGNAL FROM WHM1
```

<No signal from Wattmeter error>

- If there is no pulse signal from the wattmeter even while IDU is running, this error is displayed

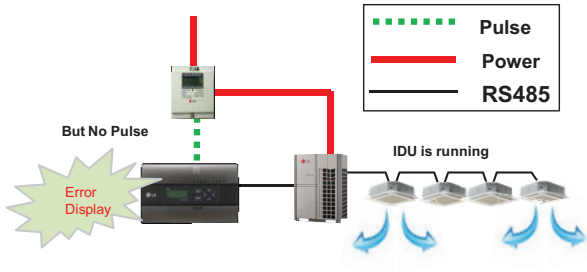

■ Requirement for WHM

- Use the WHM(Watt Hour Meter) for remote reading by sending the pulse signal.
  - Pulse width : 50~400 ms
  - Minimum sink current capability from power indicator : 3mA
  - 1W/pulse, 2W/pulse, 4W/pulse, 6W/pulse, 8W/pulse, 10W/pulse, 100W/pulse and PT/CT (1-50,000)

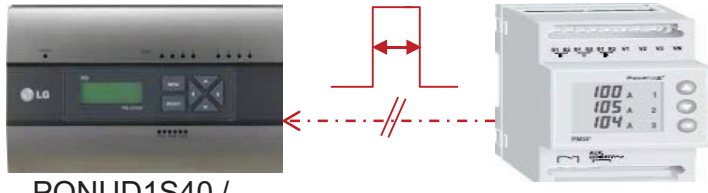

PQNUD1S40 / PPWRDB000

WHM

Outputs	
Current	2 - 100 mA
Voltage	5 - 240 V AC/DC. For meters with only 1 output, 5 - 40 V DC.
Pulse output frequency	Programmable: 1 - 999999 imp/kWh
Pulse length	Programmable: 10 - 990 ms
Terminal wire area	0.5 - 1 mm²
Recommended tightening torque	0.25 Nm

< Example of Watt meter Specification >

3.4 Product Description

■ Pulse/CT Type setting

Pulse type	CT(Current Transformer) type
◆ WHM W/PULSE SELECT • Enter the value displayed on the wattmeter as power consumption per pulse. *WHM W/PULSE SELECT* 1. NOT USE 2. 1W/PULSE 3. 2W/PULSE 4. 4W/PULSE 5. 6W/PULSE 6. 8W/PULSE 7. 10W/PULSE 8. 100W/PULSE 9. CT/PT	◆ Set CT and device constant value • CT : As the device to reduce the current so that the measuring device can take the measurement, enter the rate indicated on the product to the CT item. → When using 100:5 CT, enter 20 to the CT item. • Pr : As the device constant value, it is displayed as ratio of output pulse per power consumption of WHM. • For the device constant value, enter the value displayed on WHM [Pulse/kWh] → When using 2500 Pulse/kWh WHM, enter 2500 to Pr item. → When using 1 W/P WHM, enter 1000 to Pr item. CT&PULSE RATIO SET CT:00000 , Pr:00000 WHM1 [Pulse/kWh] ❊ CAUTION : If CT ratio is already set by WHM, Please set as Pulse type.

- Example) Pulse Type

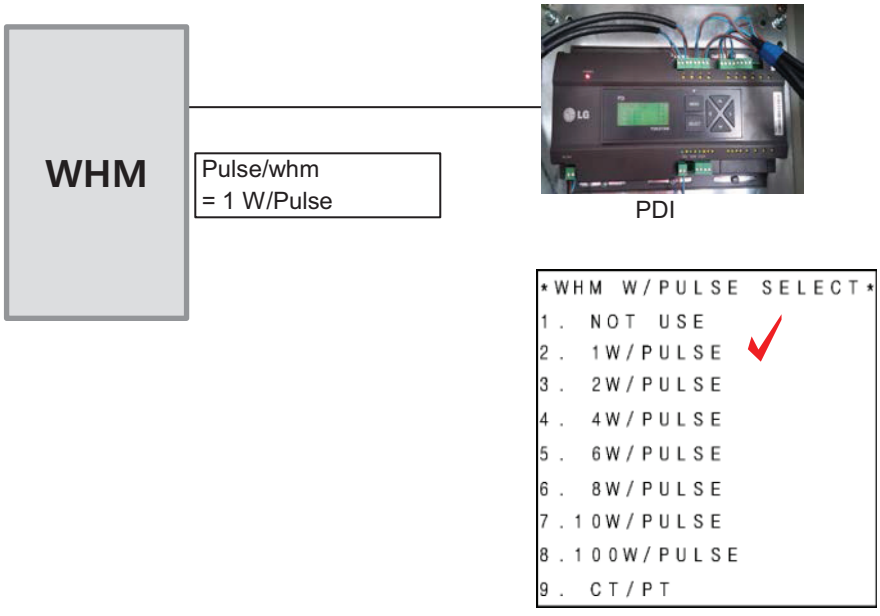

3.4 Product Description

- Example) CT Type

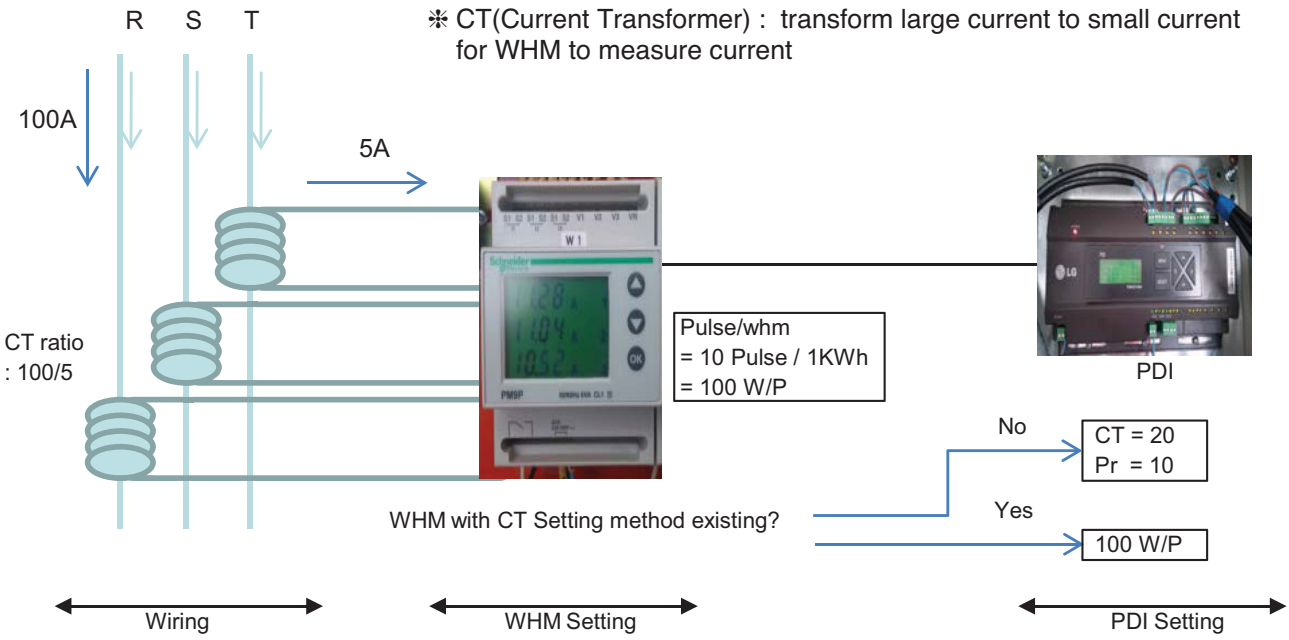

* each phase (R,S,T) have CT

* CT has a ratio spec.

3.4 Product Description

■ PDI Installation (How to WHM Select)

Recommend using WHM which noticed on T/B(B-179)

Global WHM(Watt-Hour Meter)

No	Country	Maker / Model	Spec: Type	Spec: A (Max Current)	Spec: Pulse	Image	Site
1	Brazil	Schneider / Power Logic PM200	3P4W				May, 2012
2	Brazil	Schneider / PM9P	3P4W				May, 2012
3	Czech	ABB / OD4165	3P4W	65			Oct, 2010
4	China	XIZI / DTS 601	3P4W	40	200P/KWh (5W/P)		June.2013 (singapore tech)
5	Turkey	Kohler / AEL.TF.10	3P4W		1W/P		April, 2013
6	Swiss	Saia-burgess / AAE3D5F10 PR3A00, ALE3D5F10			1W/P, 10W/P		Jun, 2013
7	Thailand	ENTES / EPR-04					May, 2012

If have to use WHM the other Brand from WHM on T/B.
The WHM should be satisfied with below specification.

• **Specification of WHM(Watt Meter) interlocked to PDI**

Digital Pulse Output Width	Watt / 1Pulse	Load Current
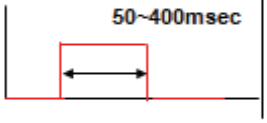 50~400msec	1W / 2W / 4W / 6W 8W / 10W / 100W (w / pulse) CT/PT (1~50,000pulse / kwh) *100w/pulse only PQNUD1S40	7~8mA

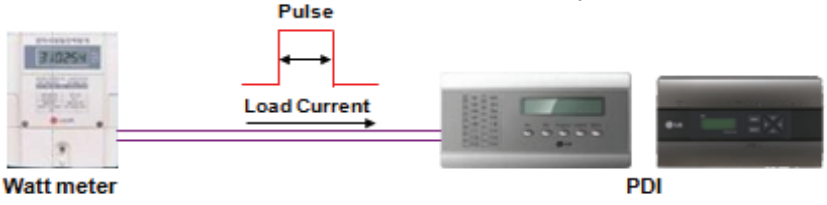

Outputs	
Current	2 - 100 mA
Voltage	5 - 240 V AC/DC. For meters with only 1 output, 5 - 40 V DC.
Pulse output frequency	Programmable: 1 - 999999 imp/kWh
Pulse length	Programmable: 10 - 990 ms
Terminal wire area	0.5 - 1 mm²
Recommended tightening torque	0.25 Nm

< Example of Watt meter Specification >

3.4 Product Description

■ PDI Installation
(How to WHM Select : The WHM Model Selection Capacity Wise)

The WHM model should be chosen which cover the corresponding ELCB capacity.
If exceed the Max current, have to use CT and CT Type WHM.

CT Type CT Type

	A41	A42	A43	A44
Voltage/current inputs				
Nominal voltage	230 V AC		3x230/400 V AC	
Voltage range	57.7 - 288 V AC (-20% - +15%)		3x57.7/100 ... 288/500 V AC (-20% - +15%)	
Power dissipation voltage circuits	0.8 VA (0.8 W) total			
Power dissipation current circuits	0.007 VA (0.007 W) at 230 VAC and I_b	0.001 VA (0.001 W) at 230 VAC and I_n	0.007 VA (0.007 W) per phase at 230 VAC and I_b	0.001 VA (0.001 W) per phase at 230 VAC and I_n
Base current I_b	5 A	-	5 A	-
Rated current I_n	-	1 A		1 A
Reference current I_{ref}	5 A	-	5 A	-
Transitional current I_t	0.5 A	0.05 A	0.5 A	0.05 A
Maximum current I_{max}	80 A	6 A	80 A	6 A
Minimum current I_{min}	0.25 A	0.02 A	0.25 A	0.01 A
Starting current I_{st}	< 20 mA	< 1 mA	< 20 mA	< 1 mA
Terminal wire area	1 - 25 mm²	0.5 - 10 mm²	1 - 25 mm²	0.5 - 10 mm²
Recommended tightening torque	3 Nm	1.5 Nm	3 Nm	1.5 Nm
Communication				
Terminal wire area	0.5 - 1 mm²		0.5 - 1 mm²	
Recommended tightening torque	0.25 Nm			
Transformer ratios				
Configurable voltage ratio (VT)	-	1/999 - 999999/1		1/999 - 999999/1
Configurable current ratio (CT)	-	1/9 - 9999/1		1/9 - 9999/1
Pulse indicator (LED)				
Pulse frequency	1000 imp/kWh	5000 imp/kWh	1000 imp/kWh	5000 imp/kWh
Pulse length	40 ms	40 ms	40 ms	40 ms
General data				
Frequency	50 or 60 Hz ± 5%			
Accuracy Class	B (Cl.1) or Reactive Cl. 2	B (Cl.1), C (Cl. 0,5 S) or Reactive Cl. 2	A (Cl.2), B (Cl.1) or Reactive Cl. 2	B (Cl.1), C (Cl. 0,5 S) or Reactive Cl. 2

3.4 Product Description

■ PDI Installation (How to WHM Select : Installation of WHM)

Refer to the wiring diagram of WHM manual.
After installation, It is mandatory to be check if it operate correctly by WHM manufacturer.

Example) “Select” WHM Installation Manual

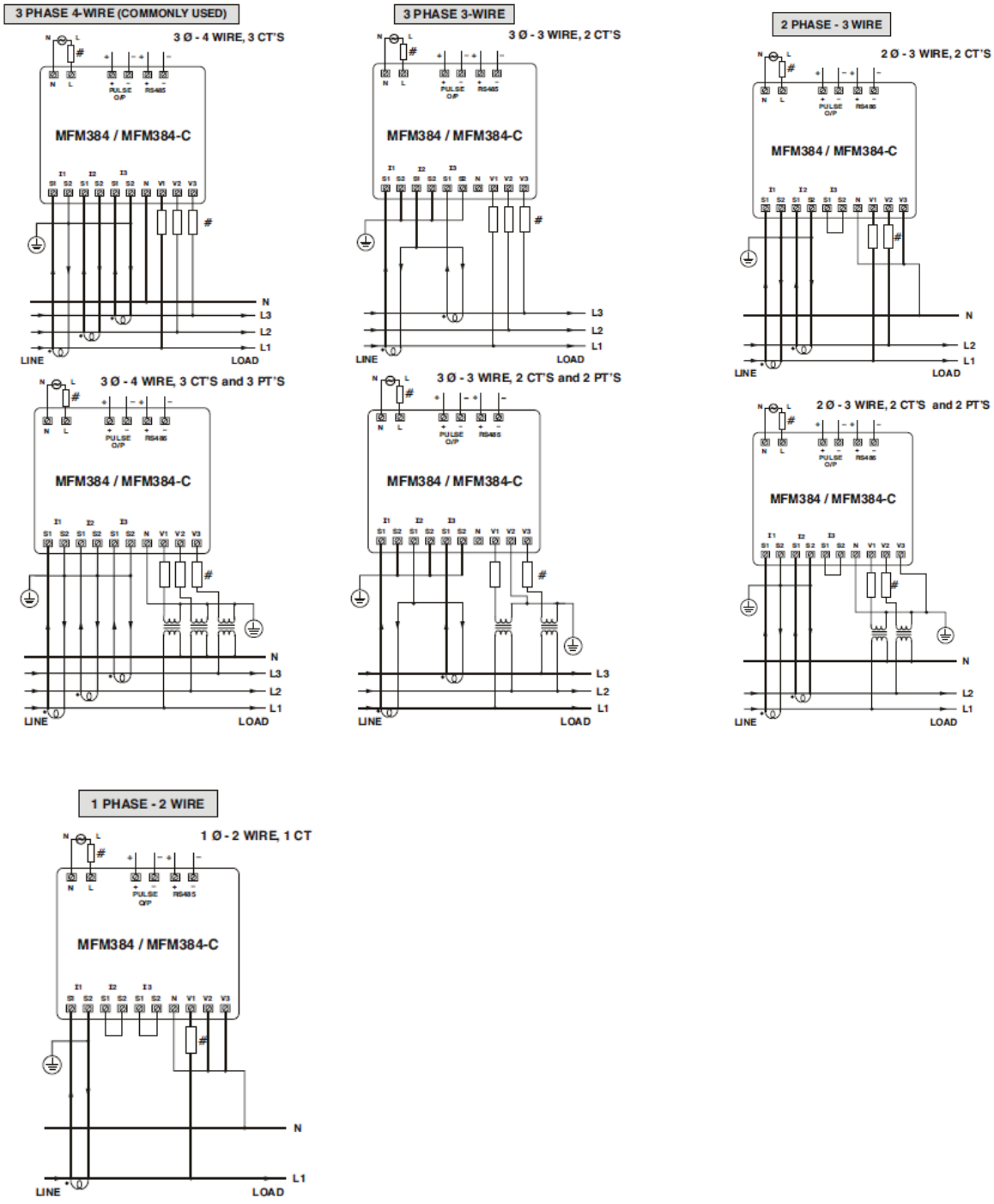

3.4 Product Description

■ PDI Installation (How to WHM Select : Actual Photo)

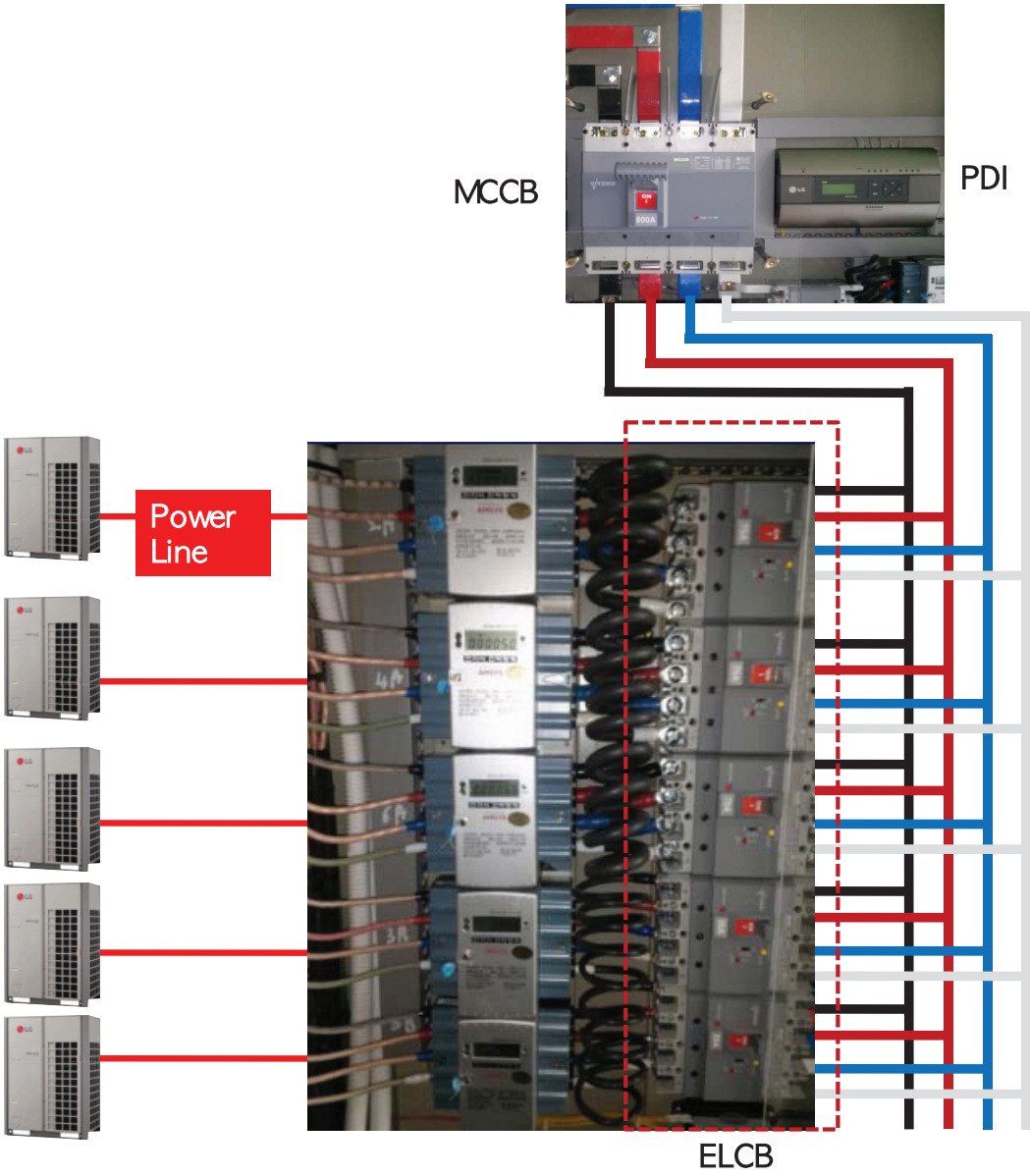

3.4 Product Description

■ PDI Installation (IDU Addressing Setting)

*Structure of IDU Address
for using Central Control

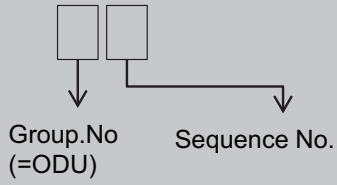

1. Set and Put the IDU Address on floor plan

2. Set the Address to IDU

1. Set the Group. Number to each ODU System

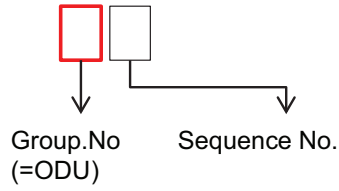

2. Set IDU Address according to ODU Group. No.

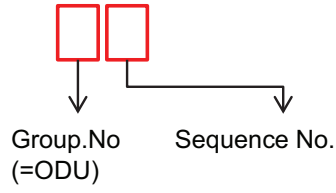

3. Put the IDU Address to floor plan.

4. Set the address to IDU according to the Floor plan address map. (Using Remote Controller).

3.4 Product Description

1. Set the Group. Number to **each** ODU System

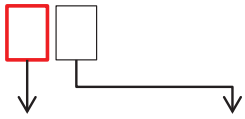

Group.No (=ODU)

Sequence No.

1. For PDI site, please make address table on the floor plan, not to make any mistake
2. Do not omit Number in the middle

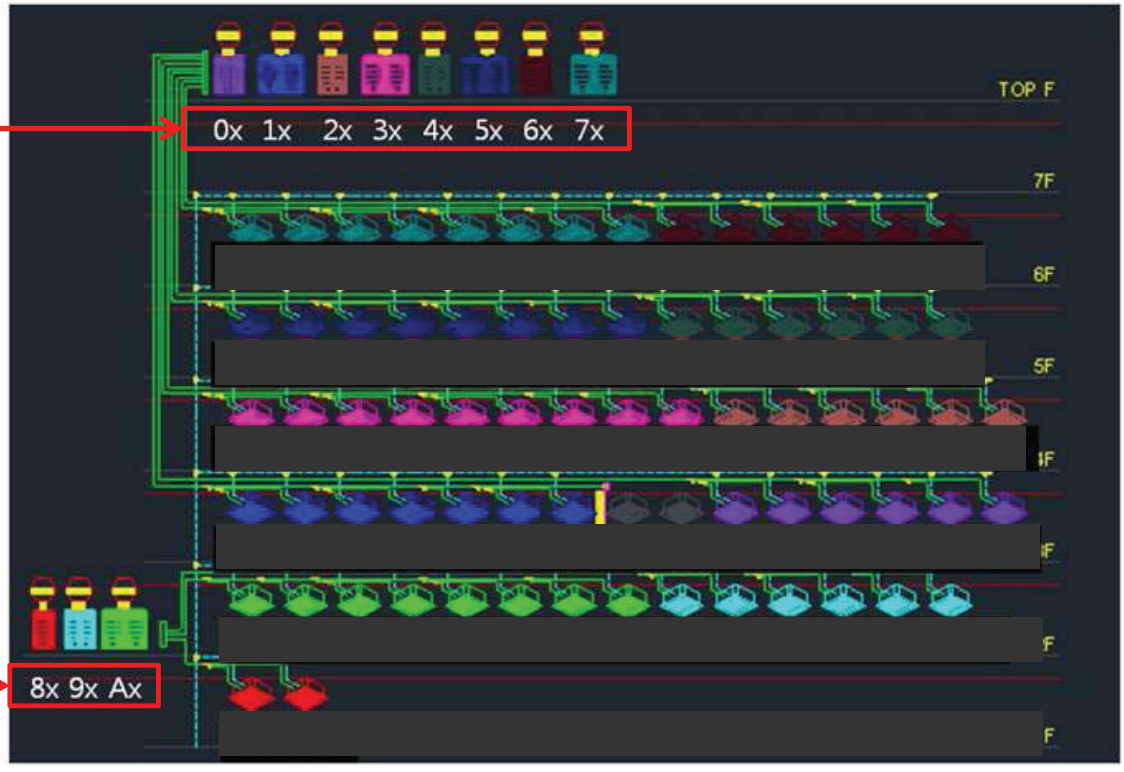

3.4 Product Description

2. Set IDU Address according to ODU Group. Number

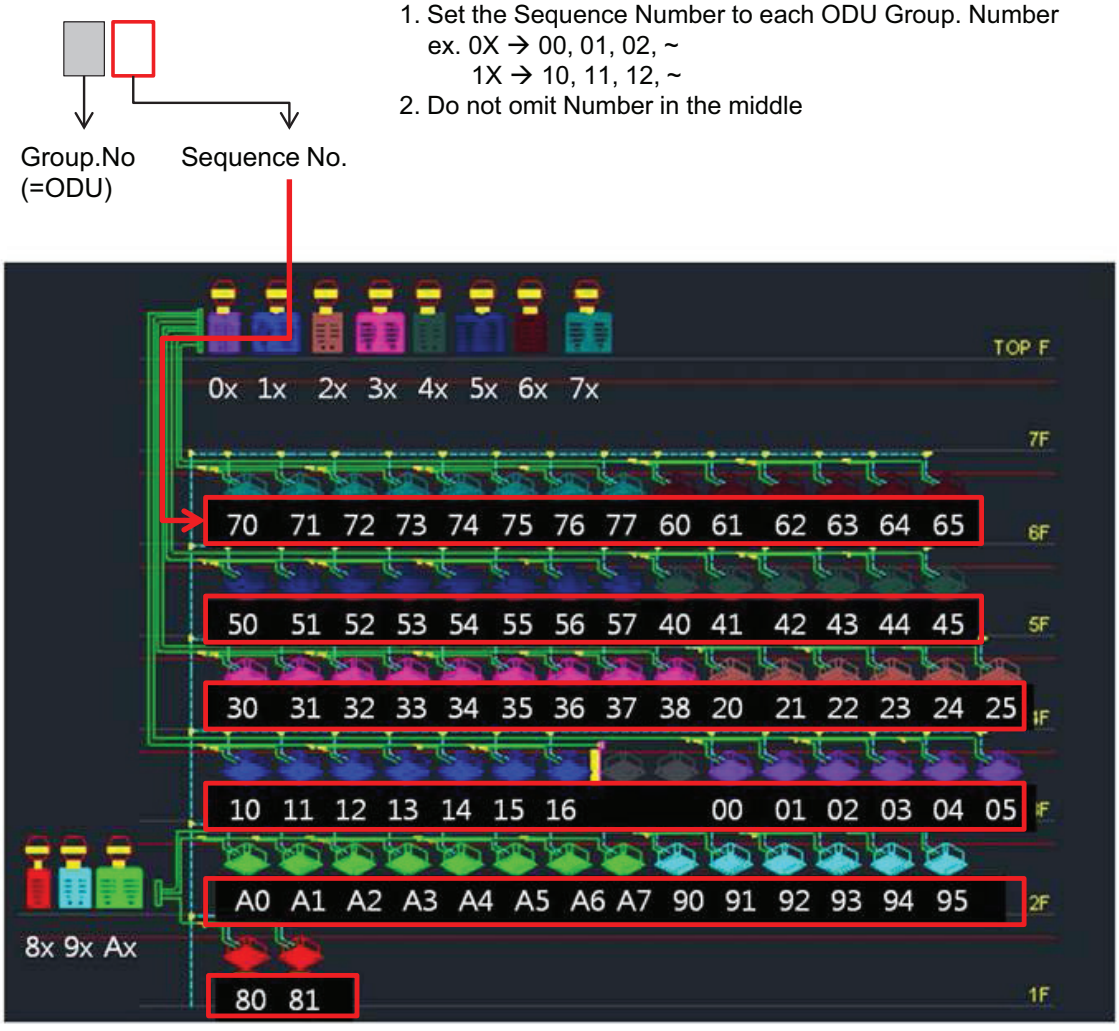

1. Set the Sequence Number to each ODU Group. Number
   ex. 0X → 00, 01, 02, ~
   1X → 10, 11, 12, ~
2. Do not omit Number in the middle

3.4 Product Description

3. Put the IDU Address to floor plan : ex. 7th Floor

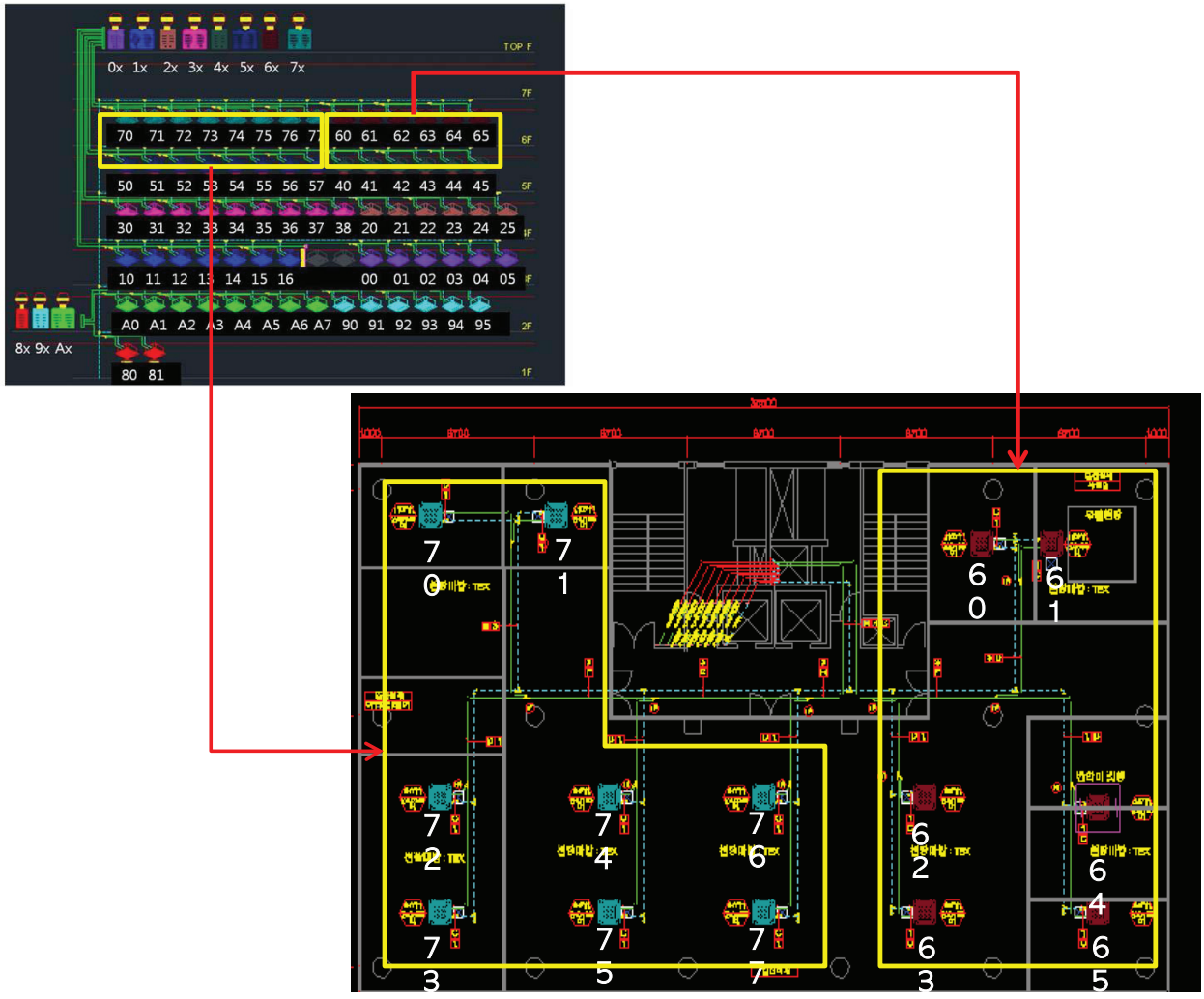

→ As following this process, you will be able to avoid the wattage error that is happen when you are setting omit address or duplicate address

3.4 Product Description

4. Set the IDU address according to the Floor plan address map. (Using Remote Controller).

※ Do not set the same address to different IDUs connected to the same Central Controller

Wired Standard(Old)

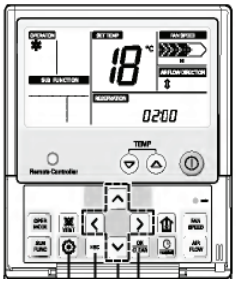

Press button(3 s)
→Repeat Pressing button
(Function code 02 : XX)
→ Set address with Up/Down
→Press ok/Clear
(saved)
→Press ESC

Wired Standard

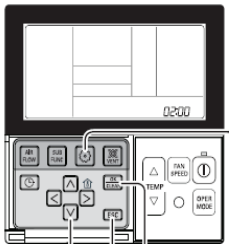

Press button(3 s)
→Repeat Pressing button
(Function code 02 : XX)
→ Set address with Up/Down
→Press ok/Clear
(saved)
→ Press ESC

Wireless

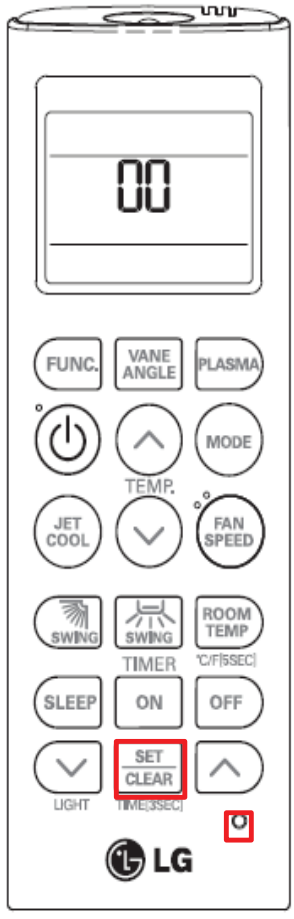

※ For Checking Address
Press Set + Reset
→ Set address with Up/Down
→ Run/Stop Button
(Saved)
→Press Reset (Exit)

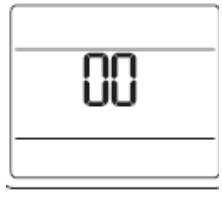

※ For Checking Address
Press Plasma+Reset
(Toward the IDU)
→Press Start/Stop button
(count the number of blinking)
→Press Reset (Exit)

3.4 Product Description

■ PDI Installation (PDI Wiring : Connection Reminders)

1. Pulse Line Connection

- Length Limit : Under 10m From WHM to PDI
- Polarity Limit : WHM's (+/-) & PDI's (+/-) Polarity match

2. Communication Line(RS485) Connection

- Length Limit : Between ODM → Under 200M, Total Under 1km
- Polarity Limit : ODU's (A/B) & PDI's (A/B) & ACP's (A/B) Polarity match
  * All Polarity A/B between ODU and ACP should be matched
- Node(Connect) Limit : Max 32 EA
  Including Central Control Unit & ODU(or PI 485), the number of device connected between central control device and ODU is not exceed 32 EA

Cf. Total Number of IDU that you can control : 128 EA

3.4 Product Description

■ PDI Installation (PDI Wiring : Pulse line Connecting Method & Reminders)

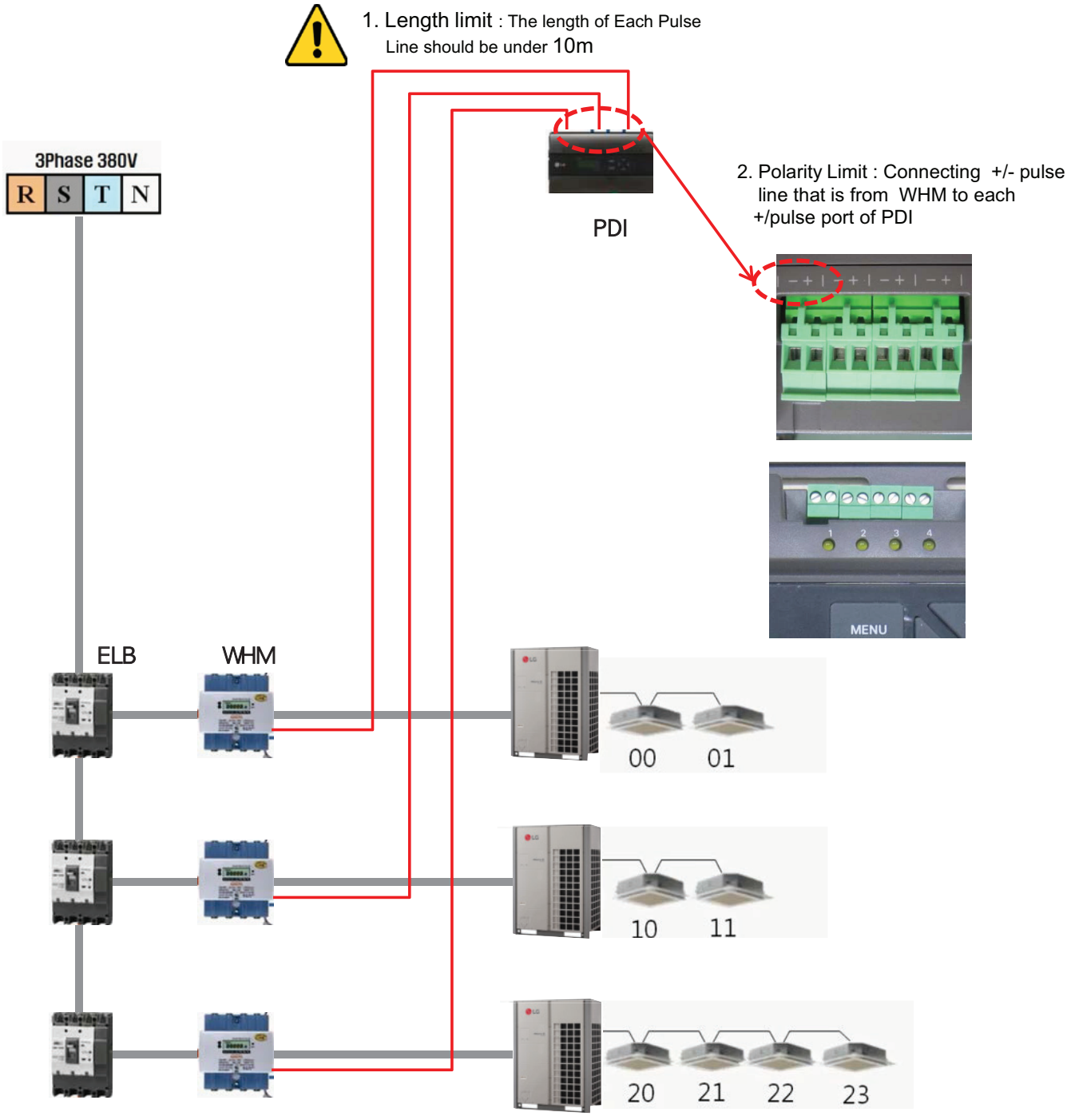

3.4 Product Description

■ PDI Installation (PDI Wiring : Pulse line Connecting Method & Reminders)

1. Length limit
- The length of between each Outdoor unit ≤ 200 M
- Maximum Length of 1 RS485 Line ≤ 1km

2. Node limit : Max 32 EA
- ODU(or PI 485) ↔ Central Control Unit (Multi V Outdoor * 2)
+ [PDI, Central Contol Unit * 2] + PI485 Count<= 32 ea

3. RS485 A/B Polarity Limit
- When connecting RS485 line(Communication) all lines should be matched to each A/B port

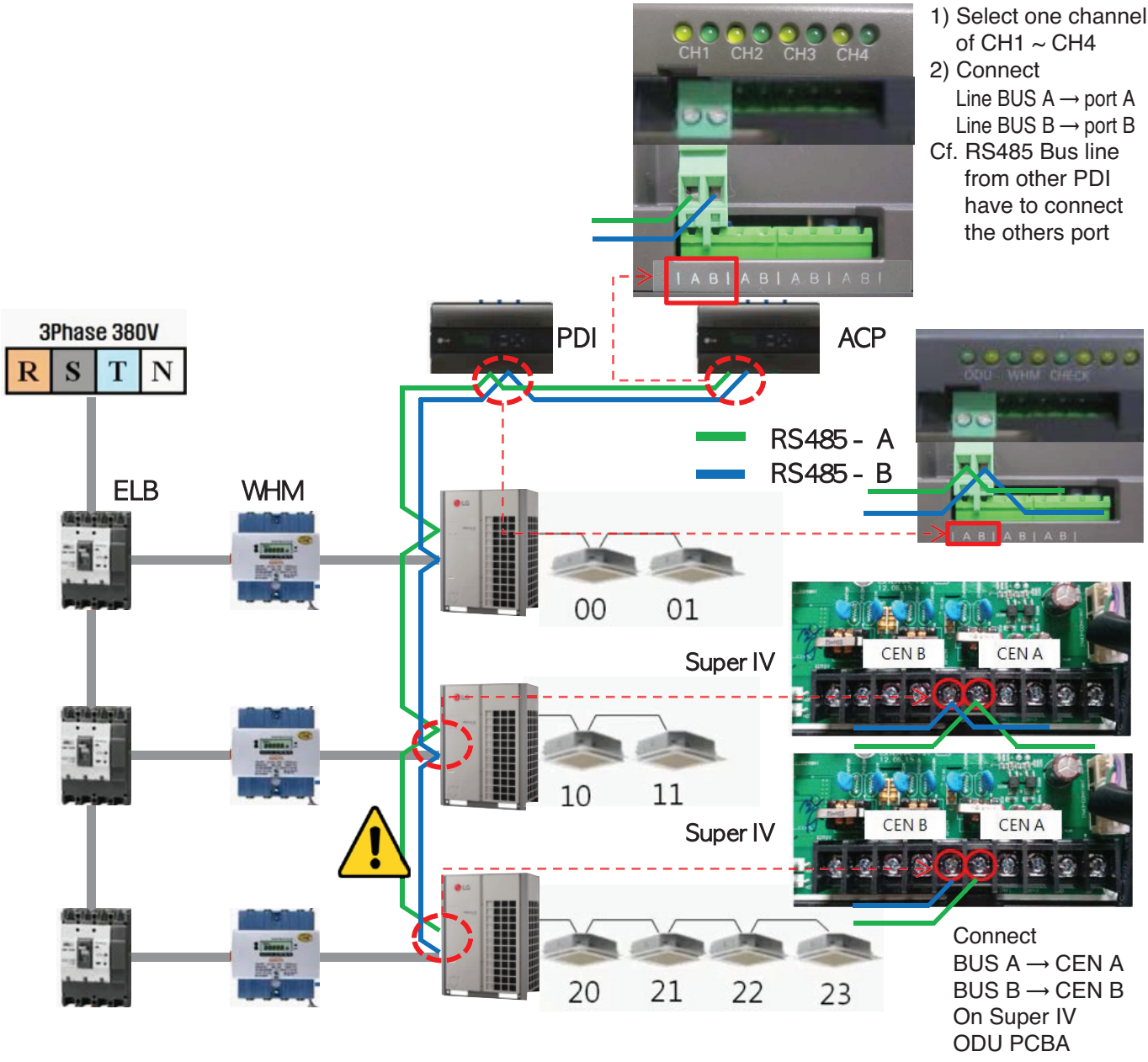

3.4 Product Description

■ PDI Installation (PDI Setting method)

You have to set in 20 minutes after turning power on.

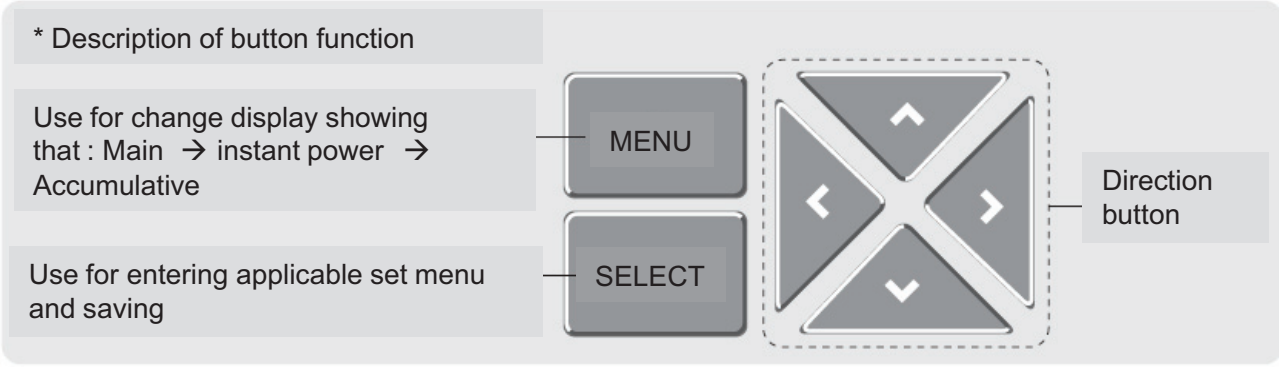

❶

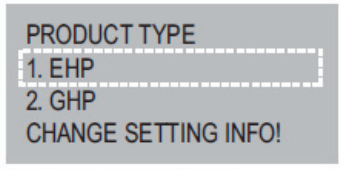

• Using up&down dirction button, select product type

❷

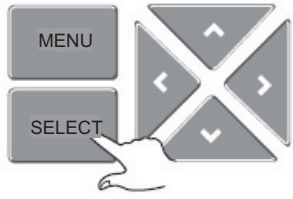

• After select product type, Press the 'SELECT' button

❸

❹

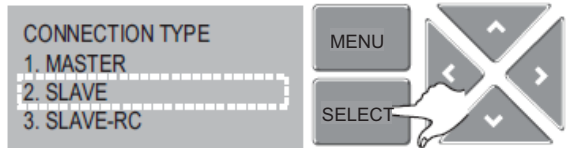

* Master : When using without central control Unit
* Slave : When using with central control Unit
* SLAVE- RC : When using with central control Unit

❺

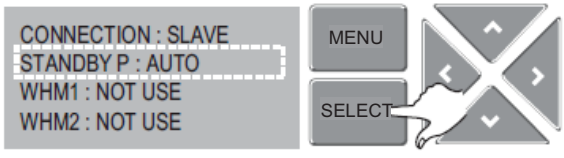

❻

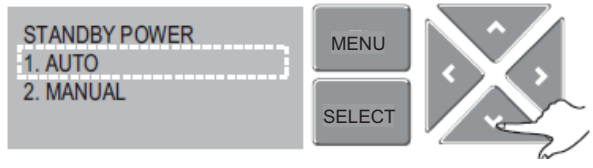

* AUTO : Automatically distribute the standby power
* MANUAL : Does not distribute the standby power

❼ • Select Port of PDI connected WHM
ex. WHM Connected Port 1 of PDI → Select WHM1

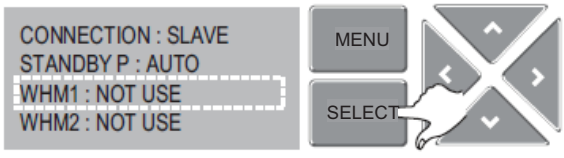

3.4 Product Description

❽ • Select value that should be calculated by WHM info.
ex. WHM : 1000 pulse/KWh → 1W/PULSE

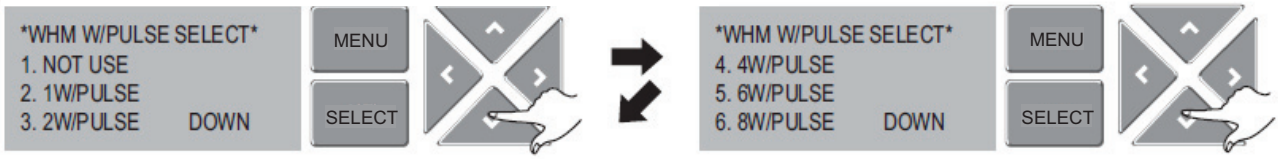

• If WHM is CT Type,
→ select CT/PT & move to other page

❾ • WHM is connected to IDU → INDOOR UNIT Select

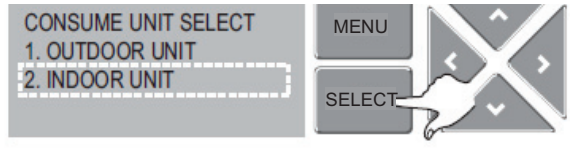

❿

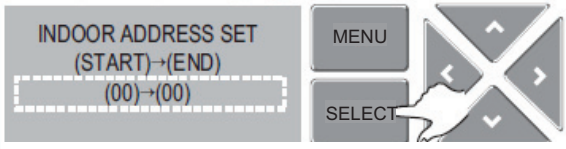

• Setting the start & end address of IDU
• Detail method is described in other page

⓫

• After finishing the setting,
Press the " MENU" Button for getting back

■ PDI Installation (PDI Setting method, When using CT Type WHM)

❽

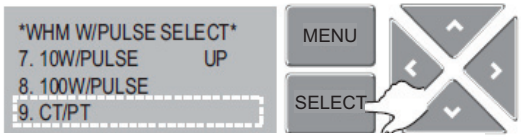

• If WHM is CT Type, select CT/PT

❾

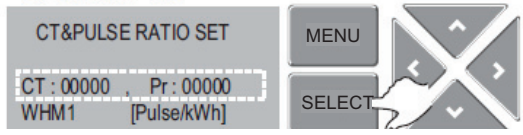

• Setting the CT & Pr value
• Detail method is described in next page

❿

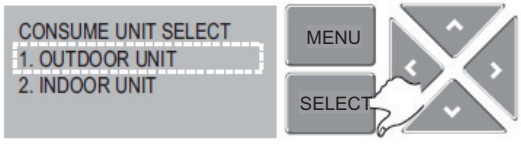

If WHM is connected to IDU
→ Select INDOOR UNIT

⓫

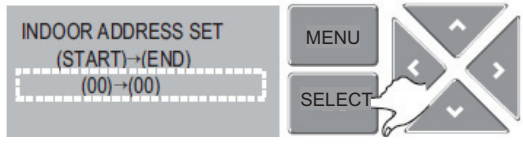

• Setting the start & end address of IDU
• Detail method is described in other page

⓬

After finishing the setting,
Press the " MENU" Button for getting back

3.4 Product Description

■ PDI Installation (PDI Setting method, When using General Type or CT type WHM)

Programmable or Not		General or CT Type
1. Global	Programmable WHM	General Type WHM without actual CT
		CT Type WHM with actual CT
2. Domestic	Non programmable WHM	CT Type WHM with actual CT

Why use the CT TYPE WHM(purpose)

: When the WHM model doesn't cover the ELCB capacity, turn down the current (100A → 5A, CT Ratio=20=100/5)

3.4 Product Description

■ PDI Installation (PDI Setting method, Case 1(Global) : Programmable & General Type WHM)

1. Put CT Ratio to WHM

- ① Putting CT Set value
  = primary : secondly = 1 : 1

2. Set & Put the Pulse Ratio to WHM

- ② Setting the Pulse Ratio
  → You can set this value within the WHM Spec
  . ex WHM Spec = 1~99999 impulses
  if you choice 10 pulse/1kWh

➔ ③ Putting Pulse Ratio : 10

3. PDI Setting

- ④ Putting CT ratio =1
  & Pulse value

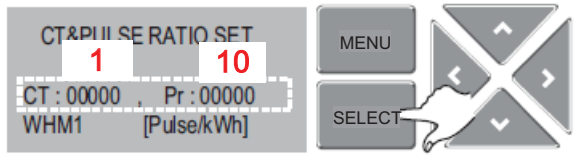

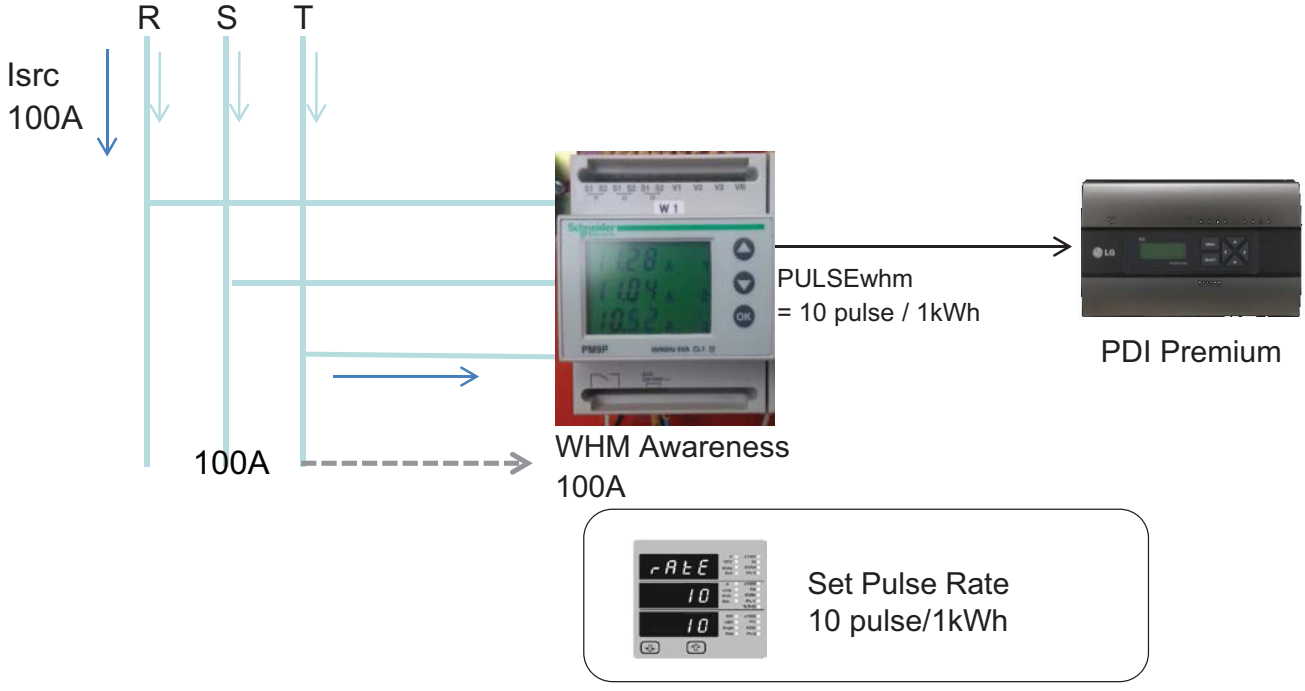

Isrc(current) : large current (difficult to measure)

3.4 Product Description

■ PDI Installation (PDI Setting method, Case 2(Global) : Programmable & Need to install actual CT)

1. Set CT Ratio

- ① Set Actual CT Ratio
  * Cover WHM capacity (ex. 5A)
  (EX. 5A= Isrc/CT ratio =100A/20=5A)
  → Set Actual CT :
  = primary : secondly = 1 : 1 =100:5

2. WHM Setting

- ② Putting CT Set value
  = primary : secondly = 1 : 1 = 100 : 5
- ③ Setting & Putting
  Pulse value : 10
  (if you set 10 pulse/1kWh)

※ Set "1" in CT :[ ]
Because CT Ratio was already reflected
In Programmable WHM (100:5)
If you set the CT Ration(CT=20) in PDI,
Consumption data is x 20

3. PDI Setting

- ④ Putting CT ratio & Pulse value

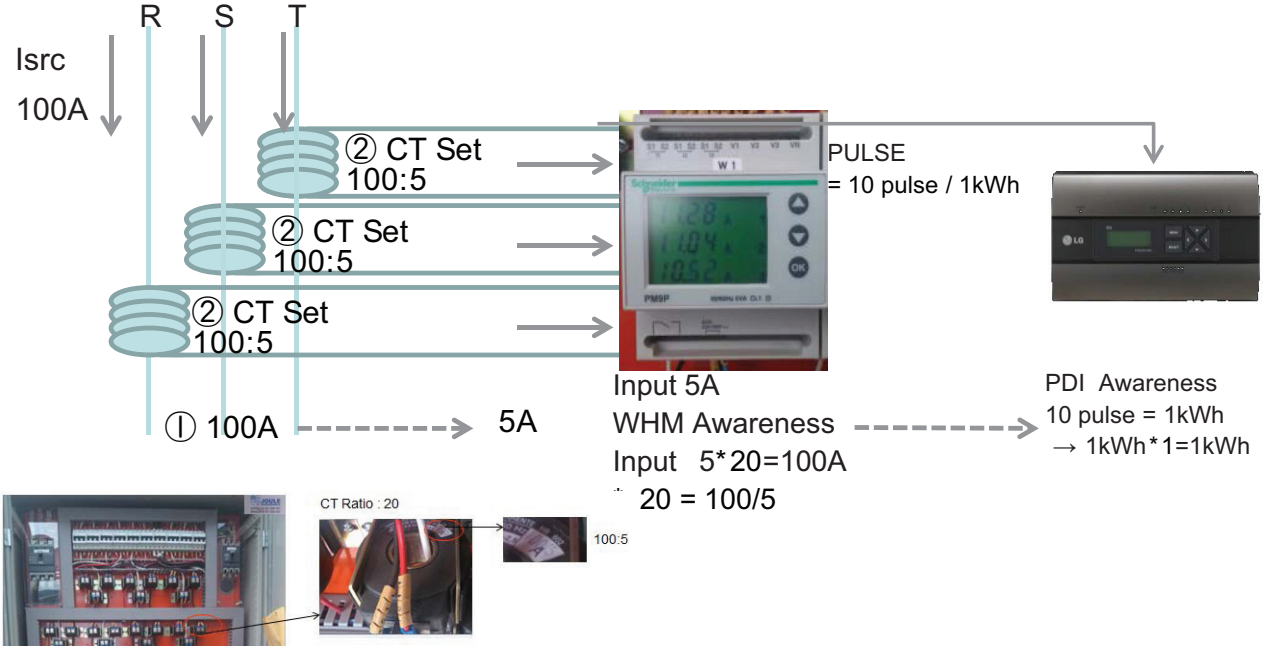

Isrc(current) : large current (difficult to measure)

3.4 Product Description

■ PDI Installation (PDI Setting method, Addressing setting method)

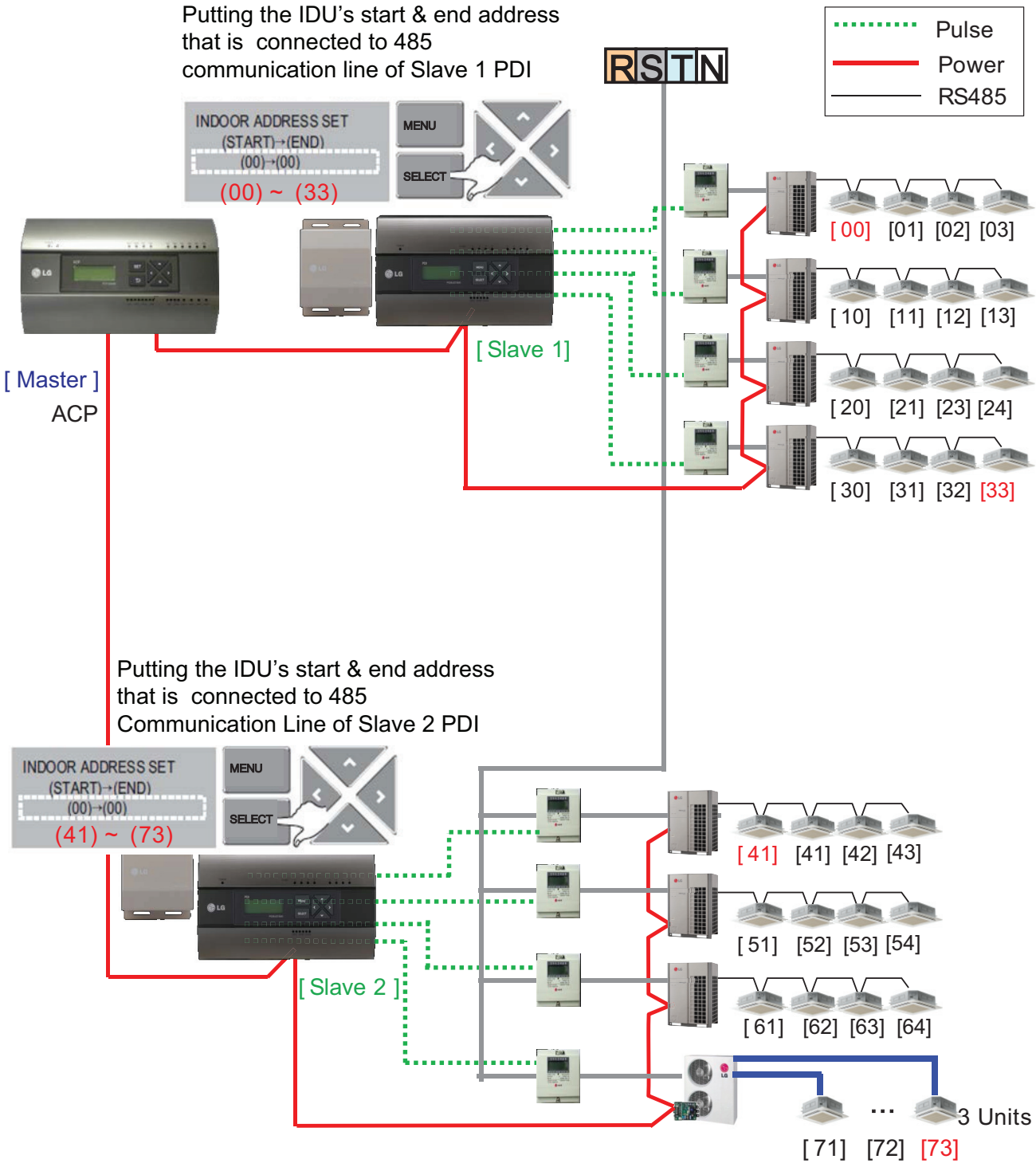

3.4 Product Description

■ PDI Installation (PDI Setting method, Power consumption check _In PDI)

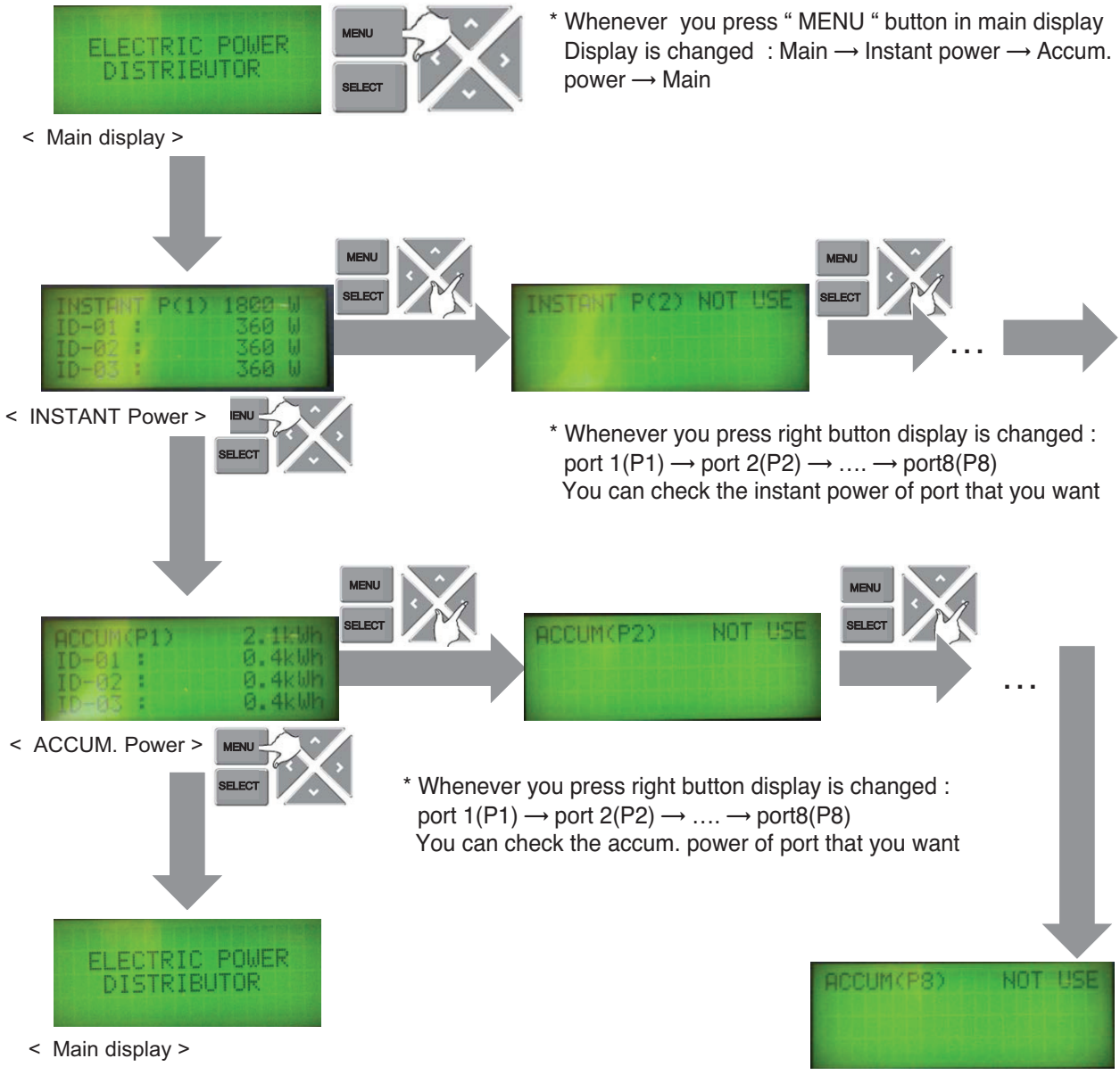

3.4 Product Description

■ PDI Installation (PDI Setting method, Method to change product type)

You have to set in 20 minutes after turning power on
→ So. You should turn PDI off and on to change the product type

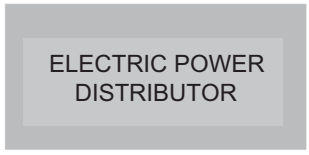

< Main display >

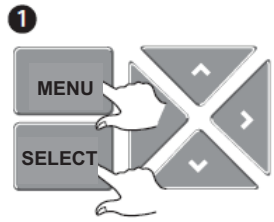

< Press " MENU" & " SELECT " button at the same time>

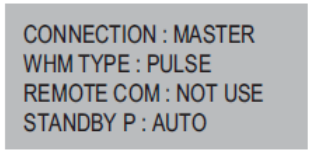

< Display for Setting function

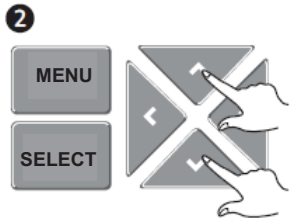

< Press UP & DOWN button at the same time >

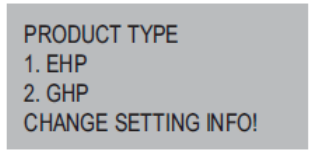

< Display for setting the Product type>

3.4 Product Description

■ PDI Installation (Power consumption check)

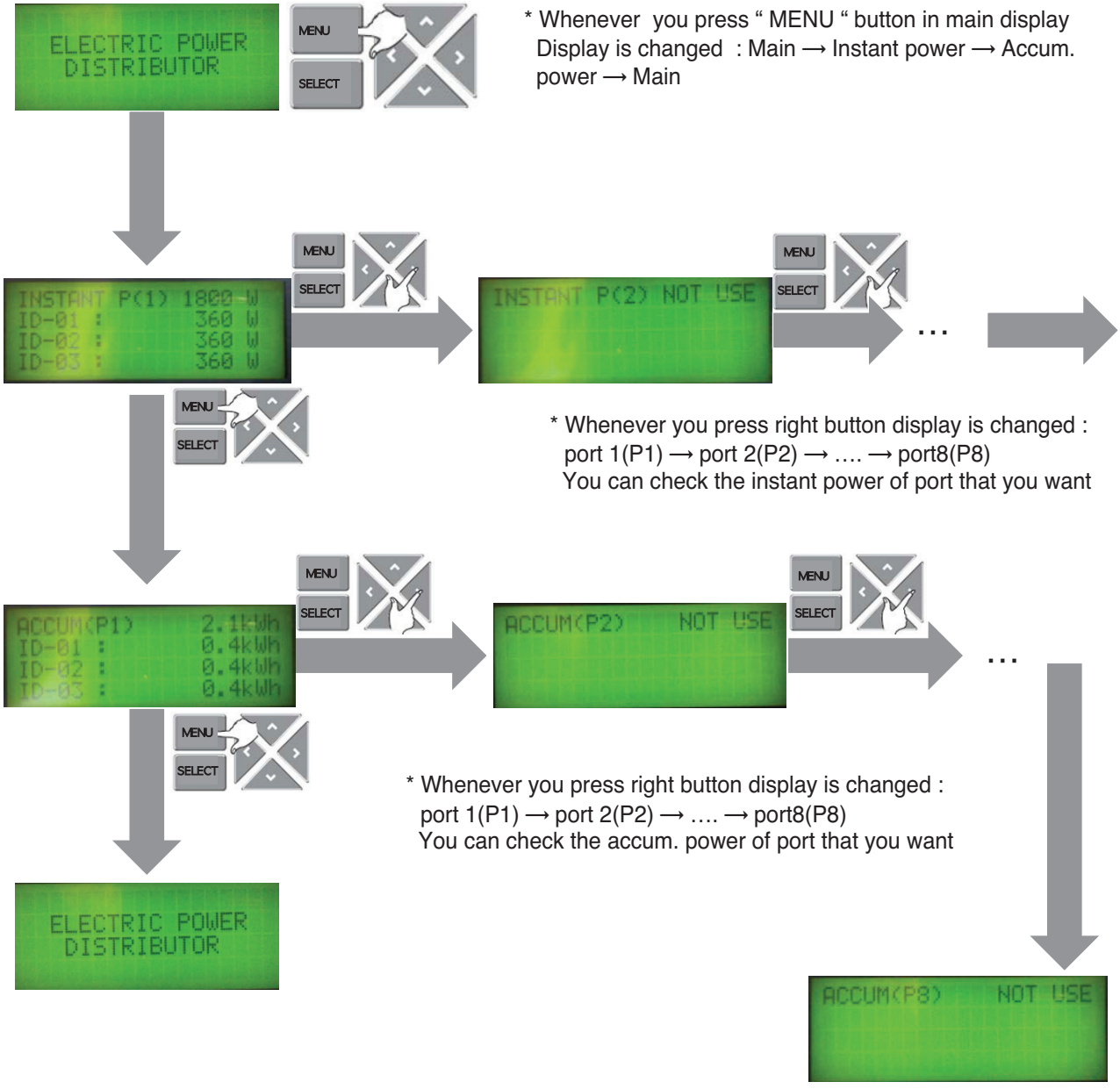

3.4 Product Description

■ PDI Installation (Power consumption check in ACP)

1. Main GUI → Click Energy Report
2. Click "Power" , "Daily" , " View All "
3. Setting the month that you need to confirm
   → After this process, you can watch the power data(kWh)

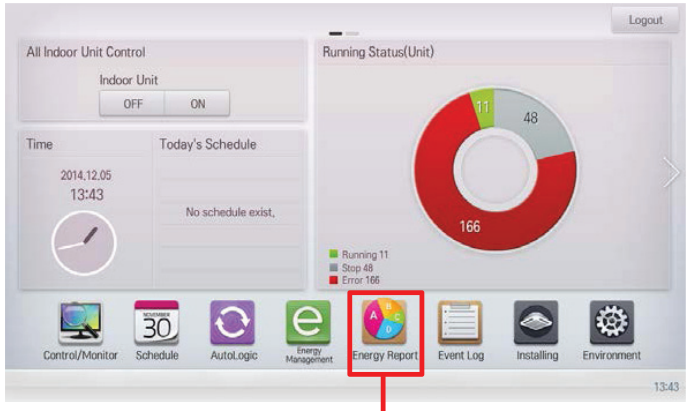

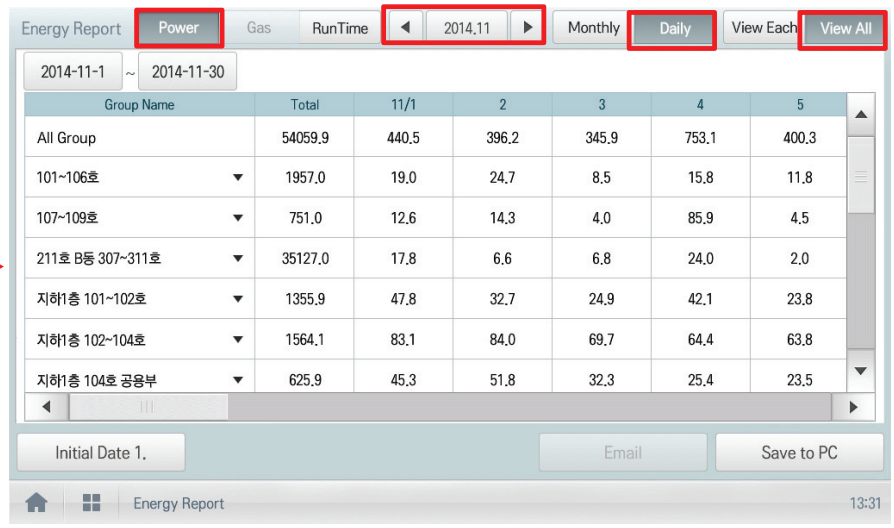

Group Name	Total	11/1	2	3	4	5
All Group	54059.9	440.5	396.2	345.9	753.1	400.3
101~106호	1957.0	19.0	24.7	8.5	15.8	11.8
107~109호	751.0	12.6	14.3	4.0	85.9	4.5
211호 B동 307~311호	35127.0	17.8	6.6	6.8	24.0	2.0
지하1층 101~102호	1355.9	47.8	32.7	24.9	42.1	23.8
지하1층 102~104호	1564.1	83.1	84.0	69.7	64.4	63.8
지하1층 104호 공용부	625.9	45.3	51.8	32.3	25.4	23.5

3.4 Product Description

■ Major Logic (STBP - Standby Power Consumption)

1) Set as AUTO : In this mode, PDI distributes the STBP to the each IDU unit

① Mode setting

* In 20 minutes after turning on

② STBP operating

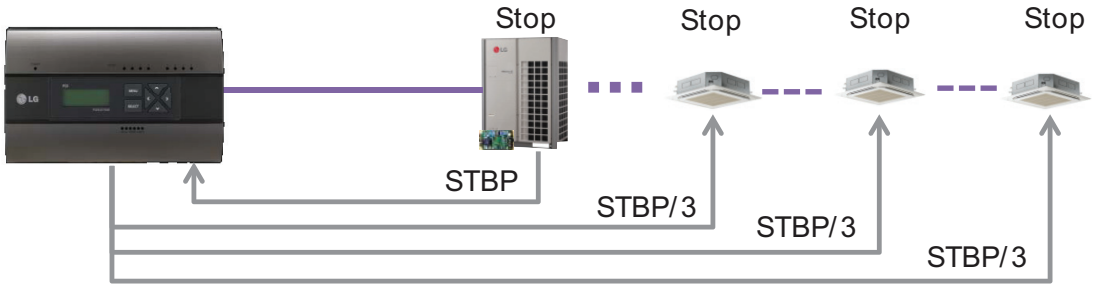

③ Check result

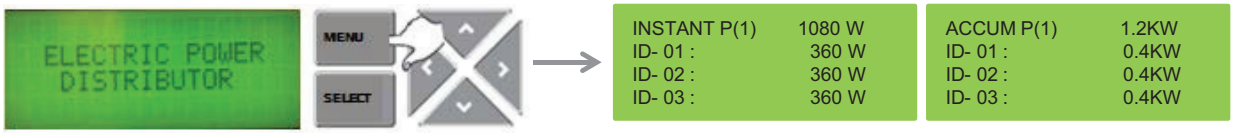

3.4 Product Description

2) Set as Manual : In this mode, PDI saves the STBP in PDI STBP's page , do not distribute to each IDU

① Mode setting

* In 20 minutes after turning on

② STBP operating

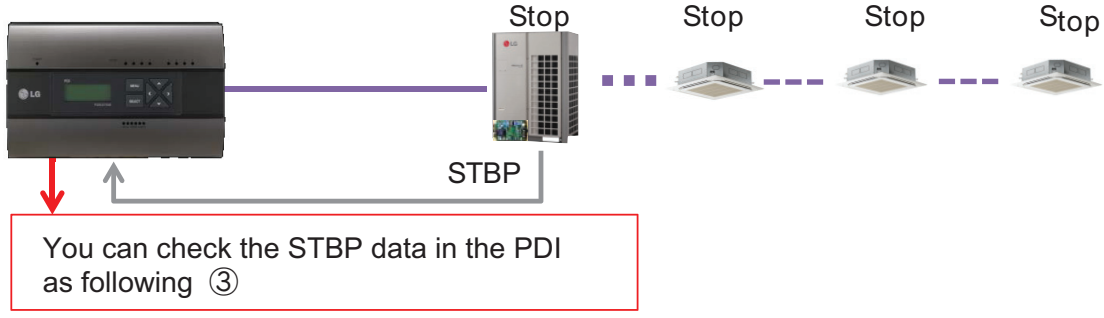

③ Check result

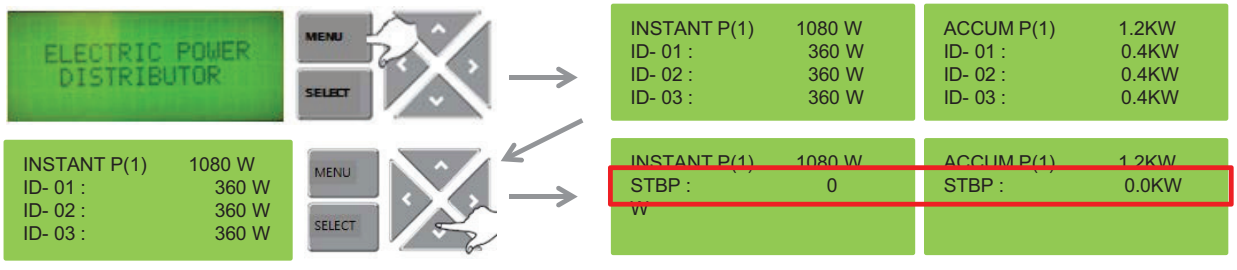

3.4 Product Description

■ Major Logic (PDI Distribution Logic)

Any IDU run connected to a ODU → ***Distribution to the IDU***

$$\text{Power Consumption of each IDU} = \text{Power Consumption of ODU} \times \frac{\text{Weighting Power of each IDU}}{\text{Weighting Power of total Indoor Units}}$$

Weighting Power of each Indoor Unit
= Operation (On/Off) x Capacity of IDU[Comp On/OFF (80%)+ Fan step of IDU(20%)]

※ This distribution logic has no legal basis. Use this formula internal use only.

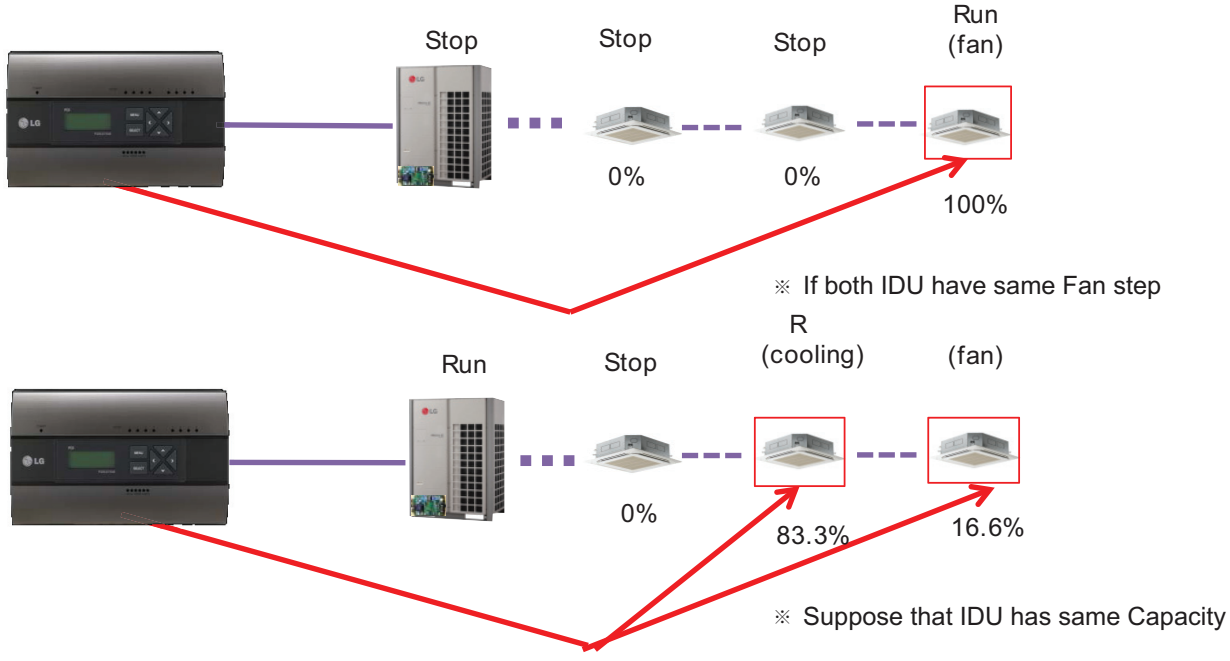

3.4 Product Description

■ Major Logic (Difference due to WHM Displaying Logic)

WHM's minimum displayable value is 0.1kW(100W)
Incase of 100pulse/1kWh(10W/P) setting , last digit(marked with red color) is not be shown on WHM LCD panel.
It can cause maximum 1kwh difference in checking period.
The actual value is counted and memorized internally (the checking period is extended , it doesn't increase)

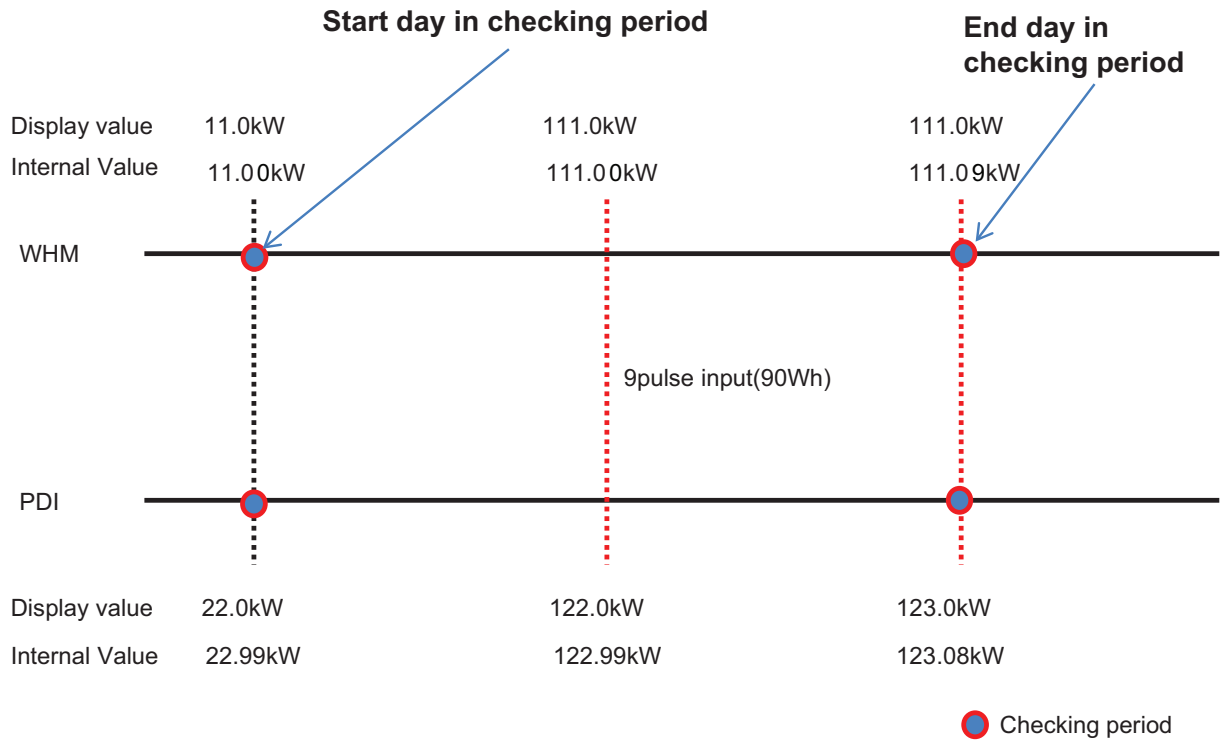

Internal Count Value
= Power of End day – Power of start day

WHM = 111.09-11.00=100.09
PDI = 123.08-22.99=100.09
⟶ Same value!

LCD Display
= Power of End day – Power of start day

WHM = 111.0-11.0=100
PDI = 123.0-22.0=101
⟶ 1kw Difference.

3.4 Product Description

■ Major Logic (Error display Logic)

1. ERROR - 01 : Central controller 485 communication error
   - It happen when PDI can't communicate with IDU set as IDU address
   - For 3 minutes
   - It displayed with IDU address of IDU that get problem

2. ERROR - 02 : Pulse line no signal error
   - Error is displayed when there is no signal from the pulse detection in the option-set wattmeter(WHM1~8).
   - For 3 minutes(even when 1 or more unit doors are operating)
   - When Pulse width is over the spec (25 ms ~ 500 ms)

3. Error display Sequence
   ① When two or more error is happened
   ② PDI display the Error that was happened early in that mix
   ③ When the first error is terminated, the other error is displayed

■ When IDU is off vs. shut down ?

1) When IDU is off
   (ex. using the Run/Stop button of Remote Controller)
   → PDI is communicating with IDU that is off, and PDI aware that IDU's status is off, so
   ① when some IDU is On : Power is distribute to IDU that is On
   ② when all IDUs is Off : Change the mode from distribution to STBP(Standby Power Consumption),
   If STBP is set 'AUTO'.

2) When the power of IDU is shut down
   → PDI doesn't communicate with IDU, so PDI aware that there is no IDU
   → PDI will be piling up the power that ODU is using
   → when Power is recovered, the value piled up is distributed to each IDU

3.4.10 ACS I/O Module

The module can be connected with ACS IV central control if additional control points are needed other than not only DI/DO but also AI/AO port of ACS IV central control unit.

ACS IV can control 3rd party device as pump, security, lighting and so on through DI/O and AI/O.

- Model name : PEXPMB000

3.4.10.1 Specifications & Dimensions

■ Features

ACS I/O

■ Accessory

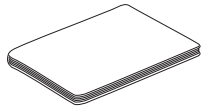

Installation / User manual

Installation screws

■ Product Specifications

Item	Description
Rotary Switch	2EA (ACS I/O Address creation)
Dip Switch	1EA (Not used)
LED	18EA (485 communication status x2, power source status x1, operation status x1, IO input status x14)
Product size and weight	155 x 126 x 64.8(width x length x height mm), 250 g
DIN Rail Specifications	Standard size width 35 mm DIN Rail
Communication port	1 channel RS485 communication, 1 channel CAN communication
External input/output port	DI x 3EA, DO x 3EA, UI x 4EA, AO x 4EA
Rated voltage	24 V~, 60 Hz / 500 mA
Range of service temperature	-20 ~ 60 °C

3.4 Product Description

■ Dimensions

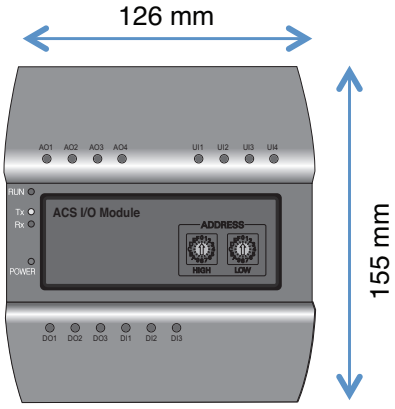

3.4.10.2 Field Wiring Diagram

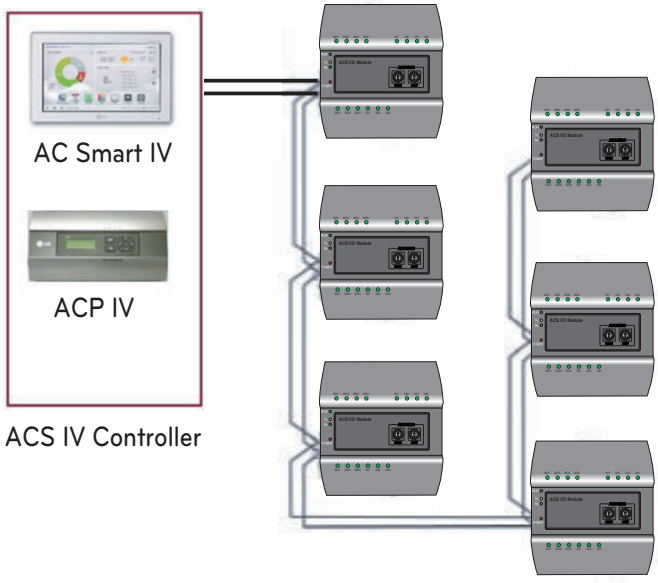

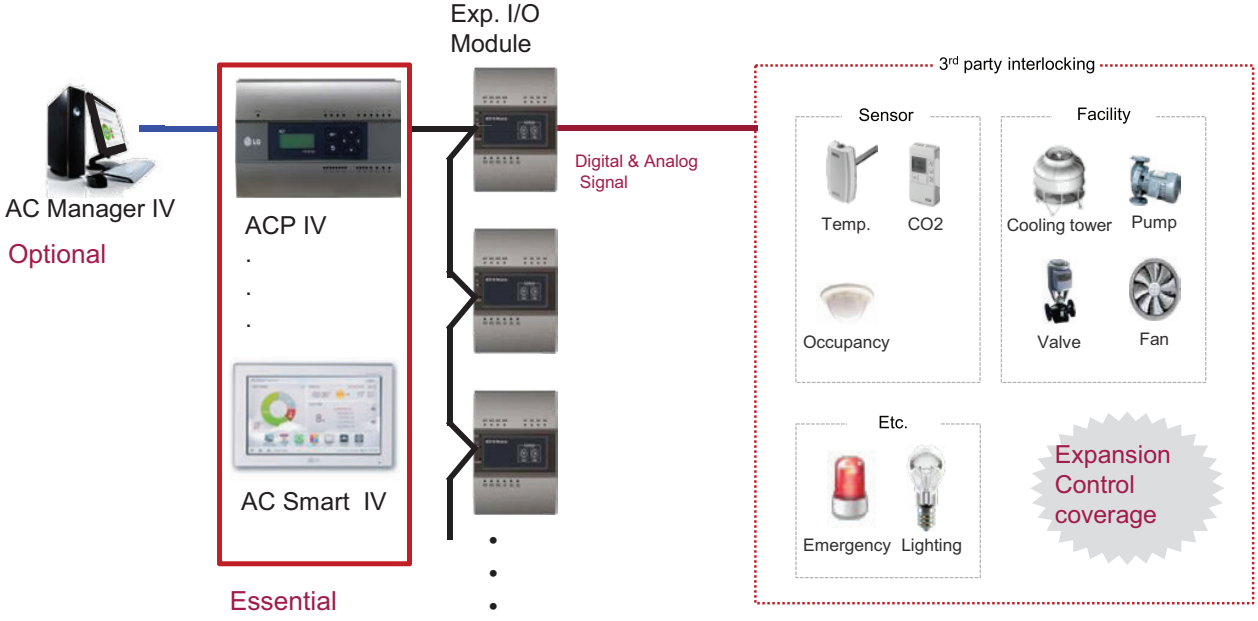

3.4 Product Description

Connecting the product

The illustration below shows all the cable connections of the ACS I/O.

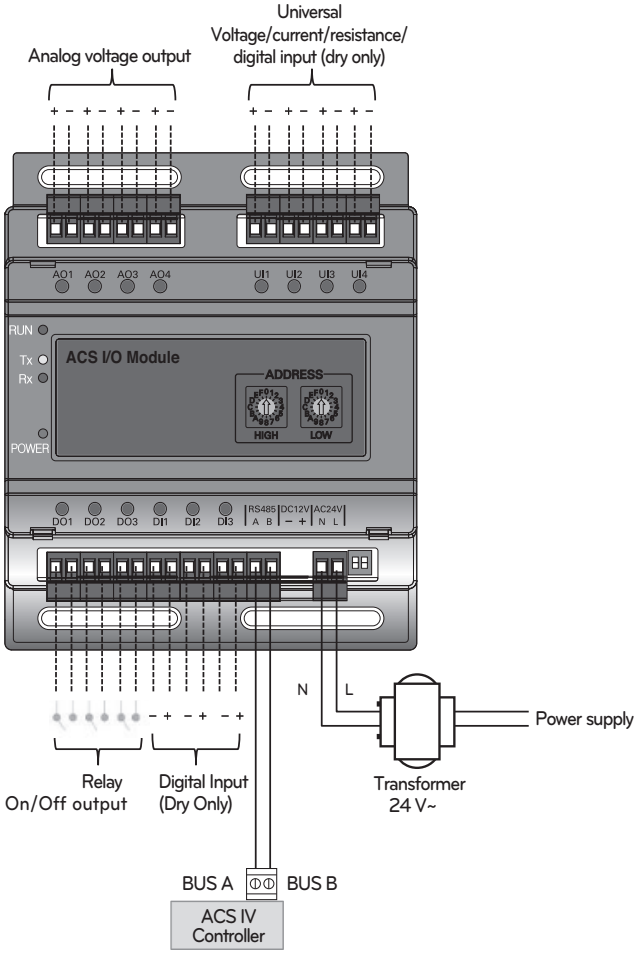

< Illustration of ACS I/O cable connections >

⚠ CAUTION

- Be careful not to plug in the wrong cord when connecting to the various input/output sockets.
  The product may be damaged an improper +/- connection is made.

3.4 Product Description

Address creation

When one ACS IV Controller(AC Smart IV, ACP IV) is connected to multiple ACS I/O, to classify each module a unique address must be used by selecting rotary switches.

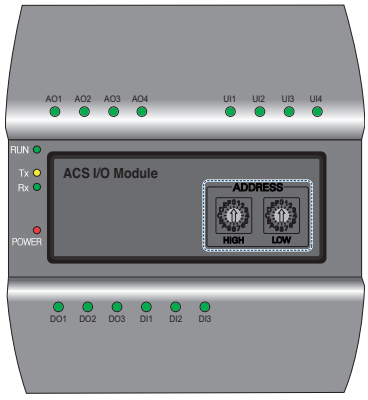

Using the ACS I/O rotary switch a 16 digit between 01~F7 can be created.
(00 addresses may not be created because they are used for broadcasting at MODBUS communications.)
Numbers 20~2F are recommended for creating an ACS I/O address.
A maximum of 16 ACS I/O can be connected.

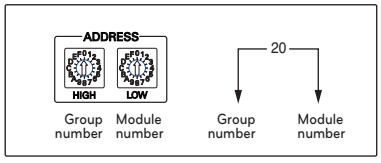

Recommended address

- Recommended address range : 20~2F
- Valid address range : 01~F7

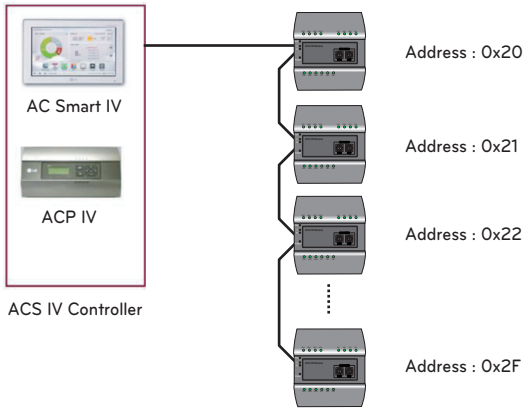

⚠ CAUTION

- Please create a unique address for each module.
- Do not create an address with 00.
  (00 addresses may not be created because they are used for broadcasting MODBUS communications.)
- After changing the address be sure to cycle power.

3.4.10.3 Name and Functions

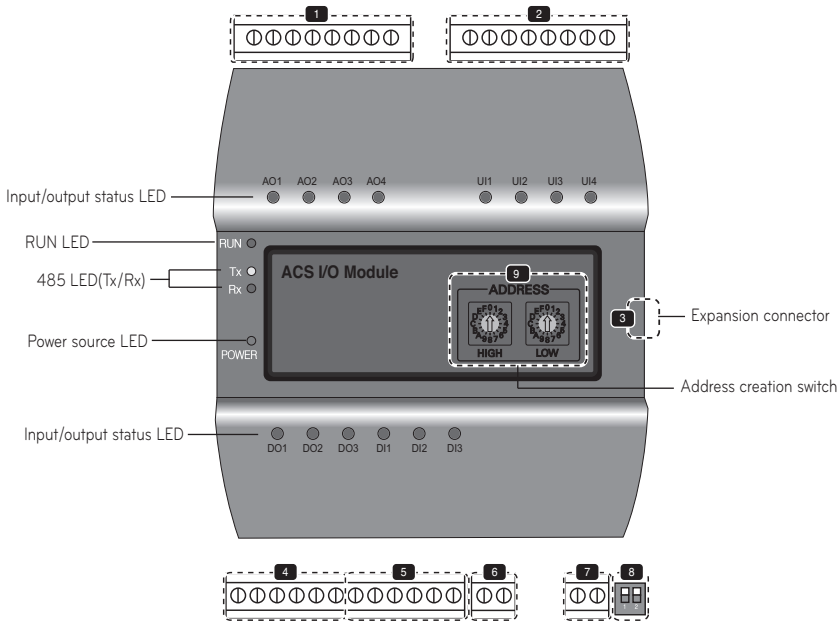

1 AO Port (control signal interconnect)
2 UI Port (control signal interconnect)
3 Expansion connector (Not used)
4 DO Port (control signal interconnect)
5 DI Port (control signal interconnect)
6 RS485 Communication unit
7 24 V~ Power input port
8 Dip Switch (Not used)
9 Rotary Switch (ACS I/O address creation)

CAUTION

When expanding on the product using a connecting product, check the shape of the expansion connector head before attempting to connecting the cord.
Connecting the wrong cord can results in damage and a malfunction of the product.

3.4 Product Description

■ LED Status

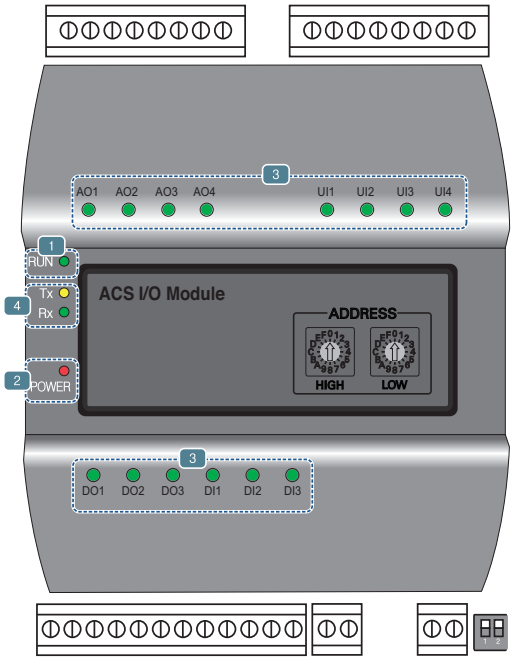

❶ RUN LED : This is used to confirm that normal operations have been established after connecting to ACS I/O.

- Under normal conditions.
  Under normal conditions flashes 5 times per second when a power source is applied.
- When an error occurs
  When an error occurs between the ACS IV Controller and the ACS I/O, it will be flash twice in 2 seconds.
  When error occurs in ACS I/Os 2 though 16, it will flash 3 times every 2 seconds.

❷ Power source LED : This is used to confirm the condition of the power source supply.

- LED is ON while power is applied.
- Otherwise LED is OFF.

❸ This is used to label the status of each port. (Refer to port descriptions for details of each of the lights.)

❹ 485 communication LED(Tx/Rx) : This is used to confirm of the operation of RS485 communication.

- It will flash according to the communication condition of 485 Tx/Rx.

3.4.10.4 PORT Description

■ Connecting to an external device (DI port)

The dry contact input method is provided for DI ports.
Do not apply external power to DI ports.
Damage will occur and warranty will be voided.
There are a total of 3 DI ports.

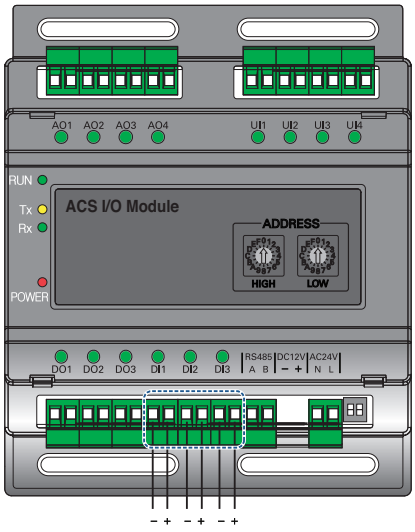

+ : Input
- : GND

LED status (DI port)

The input status LED will light up under the following circumstances.
• When there is an input value : ON
• When no input value is present : OFF

■ Connecting to an external device (DO port)

As for the DO port, this is a contact output port.
There are a total of 3 DO ports.

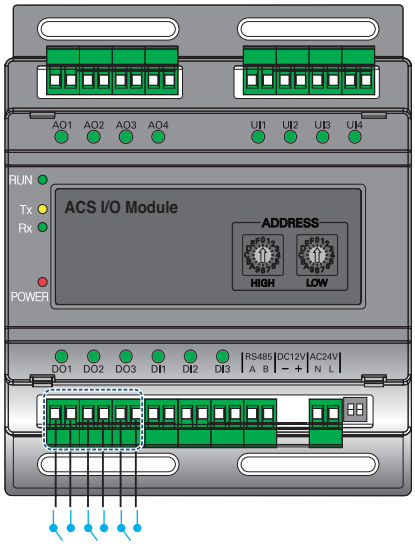

LED status (DO port)

The input status LED will light up under the following circumstances.
• When output shorts : ON
• When output opens : OFF

⚠ CAUTION

• The maximum output possible for switching through digital output is 30 V⎓ / 30 V~ and the maximum current is 2 A.
• Deviating from the intended range can cause the product to be damaged.

3.4 Product Description

■ Connecting to an external device (UI port)

Each of four UI ports can be configured for use as analog in or digital in only.
There are a total of 4 UI ports.

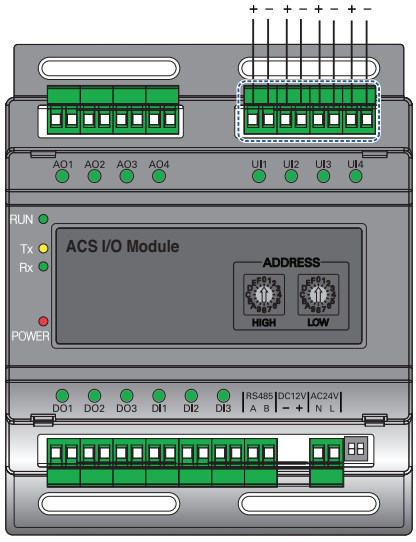

+ : Input

- : GND

The table below shows the valid configuration values for each of four UI ports.

Types of input		Minimum value	Maximum value
Analog Input	NTC 10k	0.68 kΩ	177 kΩ
	PT 1000	803 Ω	1573 Ω
	Ni 1000	871.7 Ω	1675.2 Ω
	DC(Voltage)	0 V	10 V
	DC(Current)	0 mA	20 mA
Digital Input	Binary(Dry contact)	-	-

⚠ CAUTION

- Using input other than the conditions of use list above can cause product damage and malfunction.
- Polarity matters in DC voltage and current configuration, you must follow external 3rd party device wiring to be sure that polarity is applied correctly.

LED status (UI port)

The input status LED will light up under the following circumstances.

Types of LED input		Minimum value
Analog Input	NTC 10k	OFF
	PT 1000	OFF
	Ni 1000	OFF
	DC(Voltage)	OFF
	DC(Current)	OFF
Digital Input	Binary(Dry contact)	When there is an input value, ON

3.4 Product Description

■ Connecting to an external device (AO Port)

Each of four analog output ports will provide between 0 and 10 V⎓ depending on central controller configuration.

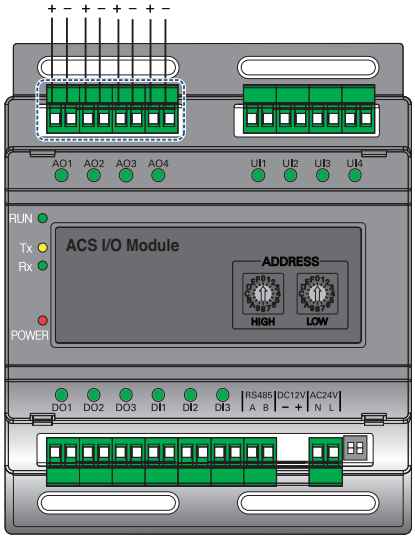

+ : Output

- : GND

LED status (AO port)

The input status LED will light up under the following circumstances.

- When creating port output from the ACS IV Controller : ON
- When creating as port reserves from the ACS IV Controller : OFF

⚠ CAUTION

- Connecting the wrong size cable results in damage and a malfunction of the product.
- Check the size of the connector head before attempting to terminate wiring.
- The maximum output current is 20 mA.

	Minimum	Maximum
Voltage	0 V	10 V

3.4.11 Chiller Option Kit

- Model name : PCHLLN000

LG central controller series provide Chiller option kit for chiller remote control and cycle monitoring (Optional)

3.4.11.1 Specifications

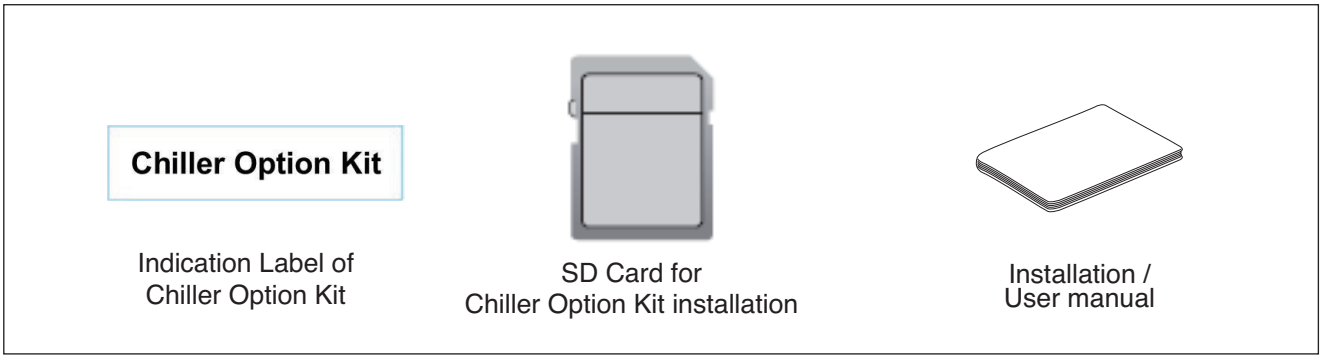

⚠ CAUTION

If any product is used other than our standard product and a problem occurs, we don't take any responsibility regarding the problem. Please keep away from using other products.

3.4.11.2 INSTALLATION

- Chiller Option Kit installation of LG HVAC Solution product should be conducted by a specialized installation service engineer.
- Chiller Option Kit installation can be proceeded with a SD Card.
- The SD Card can install Chiller Option Kit in one LG HVAC Solution product.

1. Insert the SD Card in the LG HVAC Solution product. If a backup SD Card is inserted, replace it with a Chiller Option Kit SD Card.

3.4 Product Description

2. Reboot the LG HVAC Solution. When LG HVAC Solution is rebooted, check the version. Installing Chiller Option Kit adds C+ to the version. If you have a back up SD Card, remove the Chiller Option Kit SD Card and insert the backup SD Card.
   - Version before installation: 1.00.0
   - Version after installation: 1.00.0.C+

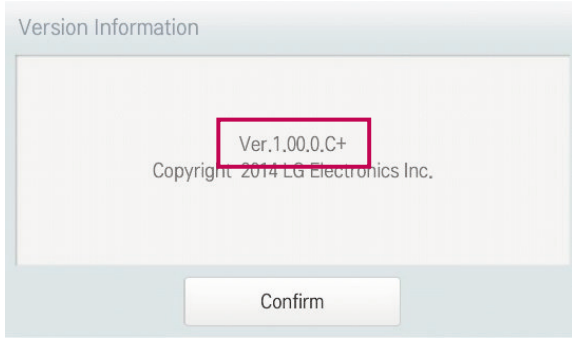

3. After completing installation, attach the indication label of Chiller Option Kit installation to LG HVAC Solution product to which Chiller Option Kit is installed by referring to the example below.
   - Attachment example for product indication label of Chiller Option Kit product
     - Attach the product indication label at the noticeable place.

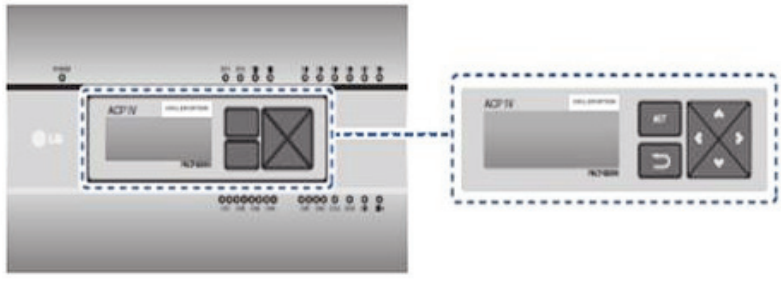

NOTE

- Refer to the user manual of LG HVAC Solution product for Chiller function related contents.
- The version of LG HVAC Solution product could be checked in [Environment] → [General Setting] → [Version Information].
- Ask specialized service engineers for the verification of the LG HVAC Solution product which can install Chiller Option Kit.

3.4 Product Description

■ Compatibility with Product

	Scroll Chiller (Air, Water)	Turbo Chiller	Absorption Chiller	Screw Chiller
Chiller Option Kit	O	Only 'Standard turbo' model	O	O

■ Register Chiller

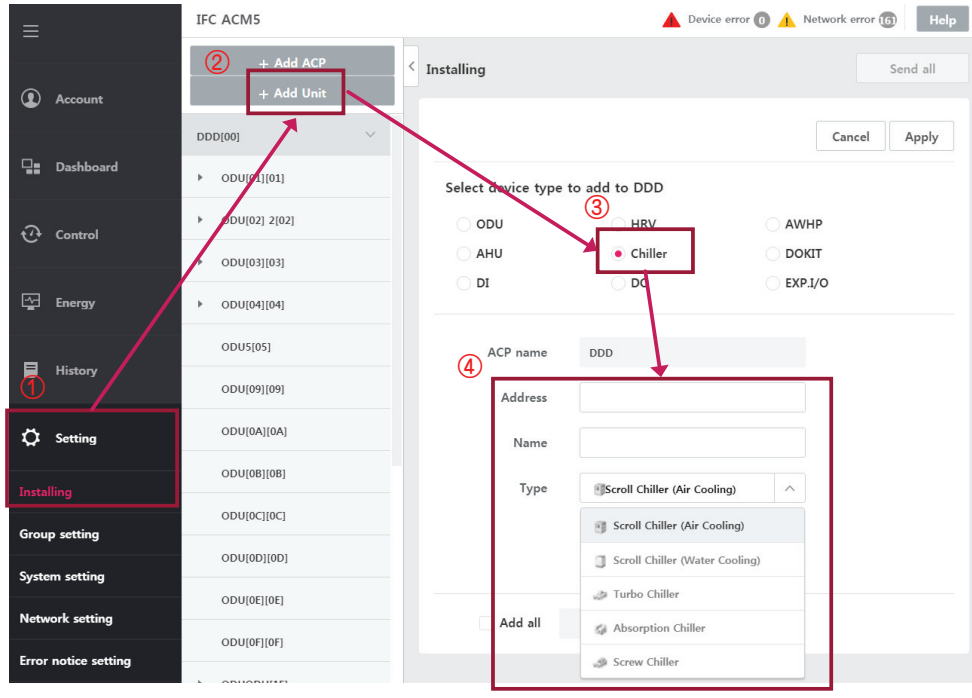

No	Category	Contents
①	Setting	Select Setting- Installing menu
②	Add Unit	Select "Add Unit" button
③	Select device type	Select Chiller device
④	Choose type	Choose Chiller type.

4. Application Controller

4.1 Dry Contact

4.2 Remote Temperature Sensor

4.3 Cool/Heat Selector

4.4 IO(Input/Output) Module

4.5 Variable Water Flow Valve Control Kit

4.6 Low Ambient Control Kit

4.1 Dry Contact

■ Overview

Model Code		PDRYCB000	PDRYCB400	PDRYCB300	PDRYCB500	PQDSBCDVM0	PVDSMN000
Feature							
		For IDU				For ODU Multi V III	For ODU Multi V IV
Case		●	●	●	●	-	-
Input port		1	2	8	-	-	-
Comm. Protocol		-	-	-	Modbus RTU	-	-
Power		220 V~	from IDU PCB			from ODU PCB	
Control	On / Off	●	●	●	●	All Off	All Off
	Mode	-	●	●	●	-	-
	Set Temp.	-	(Select & Fix)	(Select & Fix)	●	-	-
	Fan Speed	-	-	●	●	-	-
	Thermo-Off	-	(Select & Fix)	●	-	-	-
	Energy saving	-	(Select & Fix)	-	-	-	-
	Lock/Unlock	-	(Select & Fix)	-	-	-	-
	ODU low noise	-	-	-	-	●	●
	ODU Capacity	-	-	-	-	●	●
Output	Operation Status	●	●	●	●	-	●
	Error	●	●	●	●	●	●
	Room temp.	-	-	-	●	-	-
Old model name		PQDSB	PQDSBC	PQDSBNGCM1	-	-	-

4.1 Dry Contact

4.1.1 PDRYCB000

- Dimensions: 120 X 120 X 36.5 mm
- Unit types : For Connect indoor unit to other forced on/off controller
- Input power 220-240 V~

Appearance	Connect		
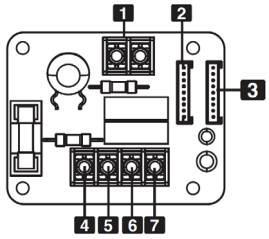	No.	Name	Function
	1	CN_POWER	Power Connector
	2	CN_CC	Indoor PCB Connector
	3	CN1	Central Controller Connector
	4	CN_DRY(L)	DRY CONTROLLER Connector
	5	CN_DRY(SIG)	DRY CONTROLLER Connector
	6	CN_DRY(ERROR CHECK)	ERROR Check Display Connector
	7	CN_DRY(OPER STATE)	Operation Display Connector

■ Accessory

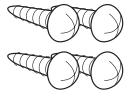

Screw
(For installation, 4EA)

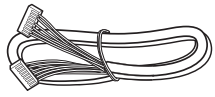

Cable 1EA
(for connecting with indoor unit)

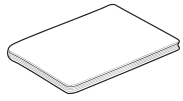

User/Installation Manual

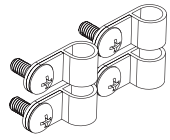

Clamp
(For installation, 4EA)

■ Installation

- To apply power source through PCB

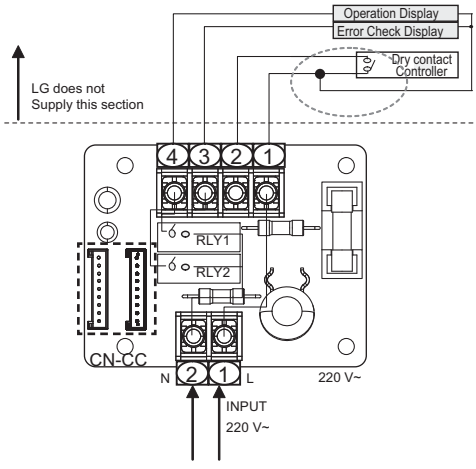

- To apply power source directly to external source

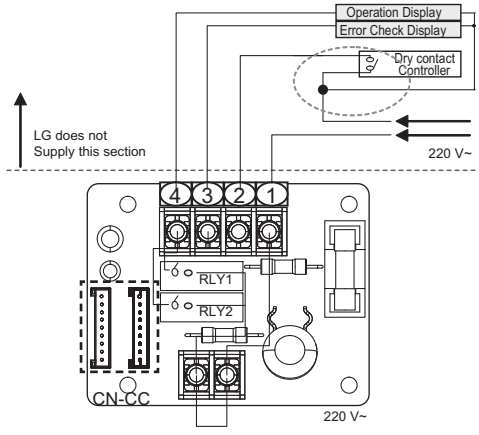

4.1 Dry Contact

4.1.2 PDRYCB100

- Dimensions: 120 X 120 X 36.5 mm
- Unit types : For Connect indoor unit to other forced on/off controller
- Input power 24 V~

Appearance	Connect		
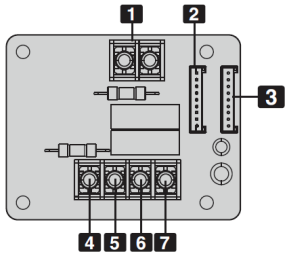	No.	Name	Function
	1	CN_POWER	Power Connector
	2	CN_CC	Indoor PCB Connector
	3	CN1	Central Controller Connector
	4	CN_DRY(L)	DRY CONTROLLER Connector
	5	CN_DRY(SIG)	DRY CONTROLLER Connector
	6	CN_DRY(ERROR CHECK)	ERROR Check Display Connector
	7	CN_DRY(OPER STATE)	Operation Display Connector

■ Accessory

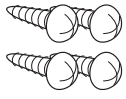

Screw
(For installation, 4EA)

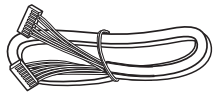

Cable 1EA
(for connecting with indoor unit)

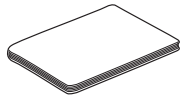

User/Installation Manual

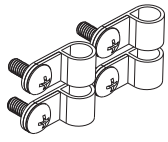

Clamp
(For installation, 4EA)

■ Installation

- To apply power source through PCB

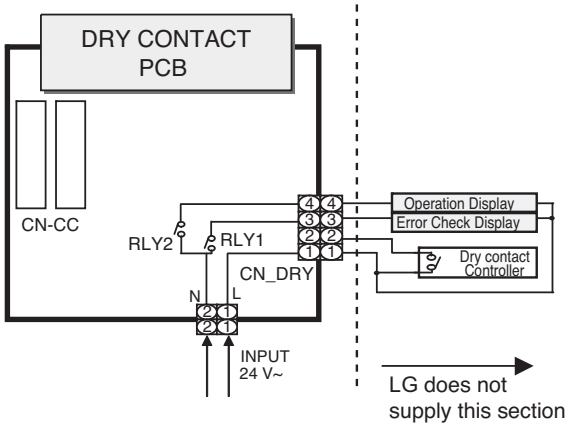

- To apply power source directly to external source

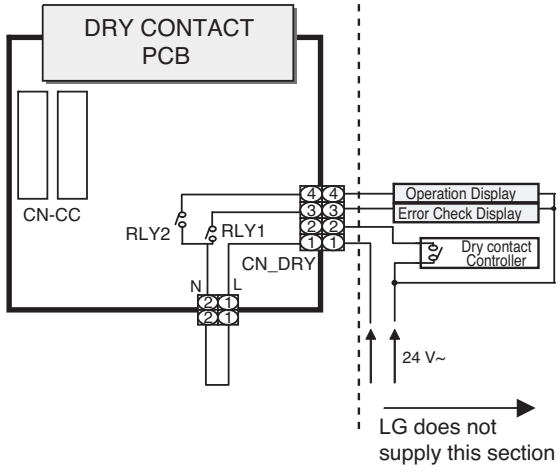

4.1 Dry Contact

■ Usage : Control indoor unit by one input signal

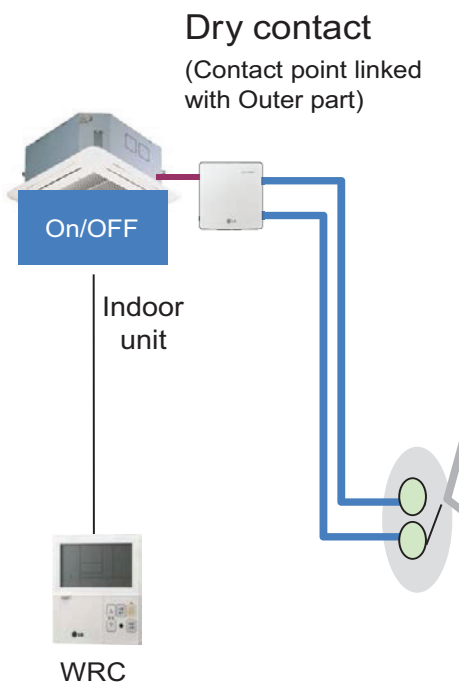

Various application

• Controls the air conditioner indoor unit as a key card insertion

• Controls the air conditioner indoor unit when the door is opened and closed

• An air conditioner can be turned on/off, using the human body detection sensor

• An air conditioner indoor unit is controlled according to the lighting on/off status

• Controls the air conditioner indoor unit interfaced with the emergency alarm

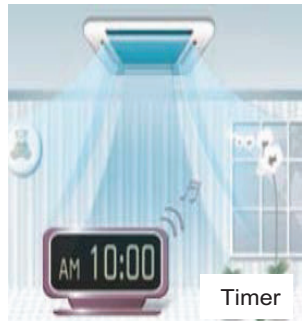

• An air conditioner indoor unit is controlled using signal of the timer device

4.1 Dry Contact

■ Dry contact recognition in Indoor unit

- Initially, switching off and on Indoor unit is required for recognizing Dry Contact.
- During this recognition time, input signal must be on

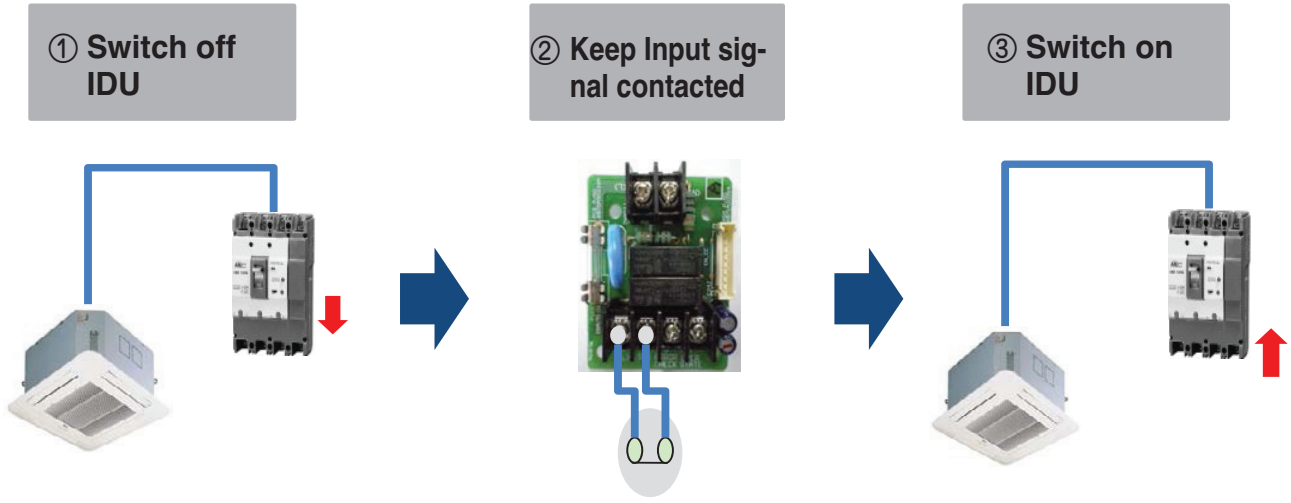

4.1 Dry Contact

■ Auto start mode / Manual mode

There are two different operation scenario depending on the mode setting

Case \ Mode	Auto start mode	Manual mode
Input On	IDU operates, Unlocked*	Unlocked
Input Off	IDU stops, Locked**	IDU stops, Locked

*Remote controller is allowed to control IDU
**Remote controller is prohibited to control IDU

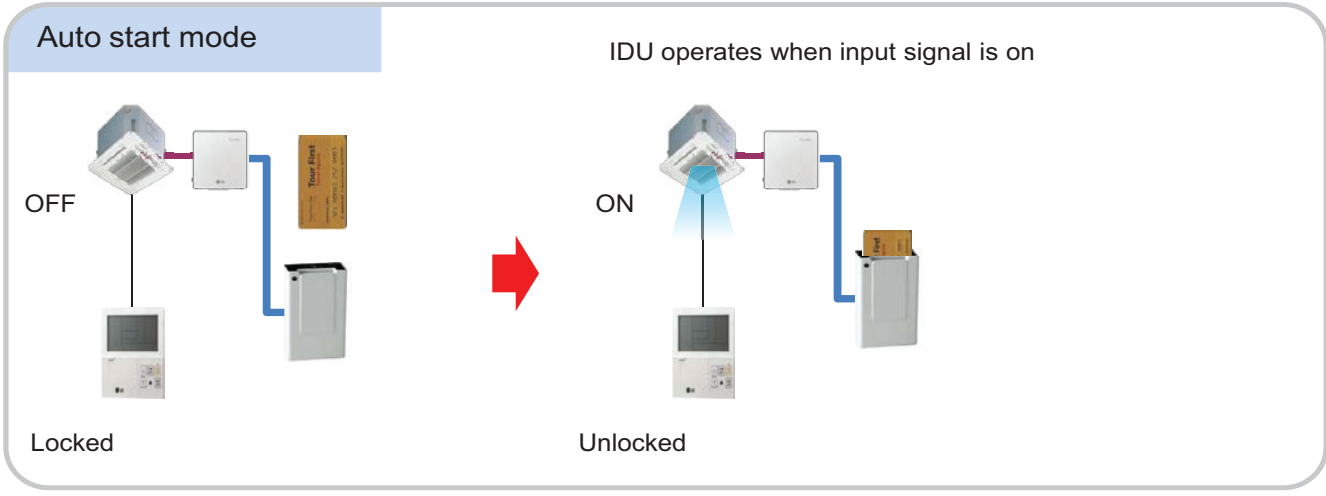

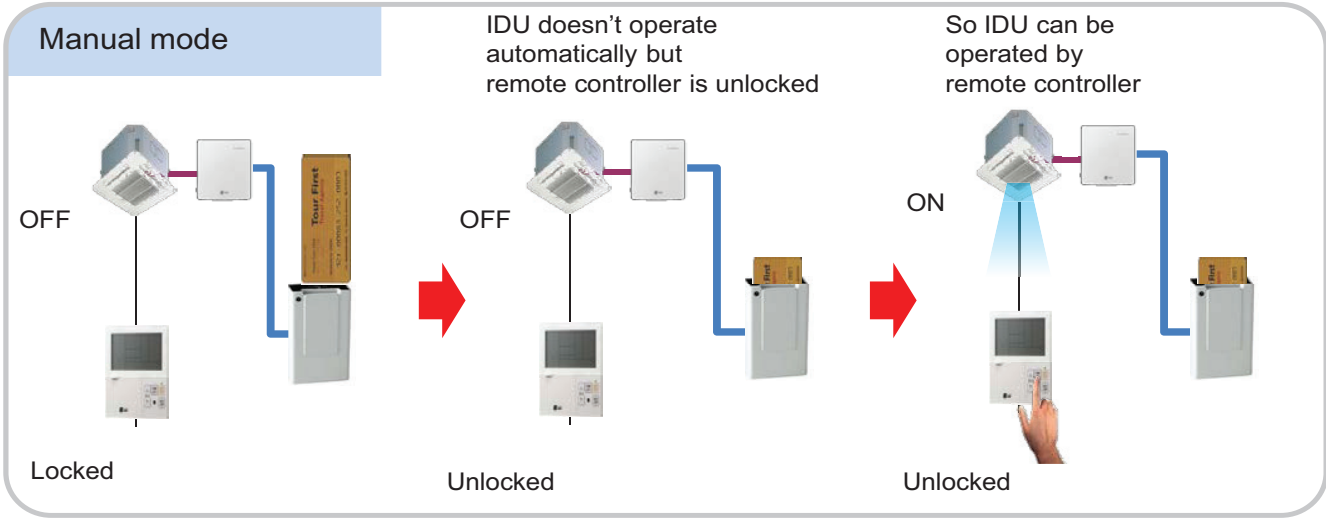

4.1 Dry Contact

■ Auto start mode / Manual mode Setting – IDU PCB

▶ Case #1 : IDU PCB without Dip switch

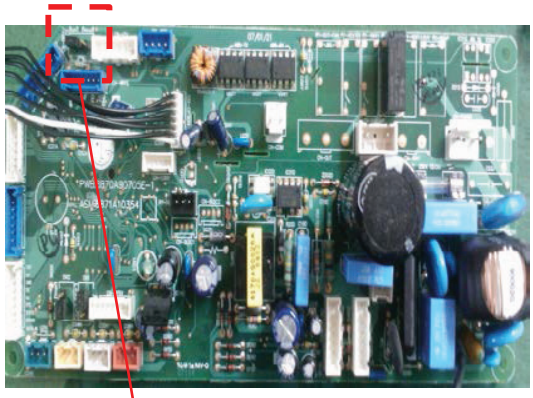

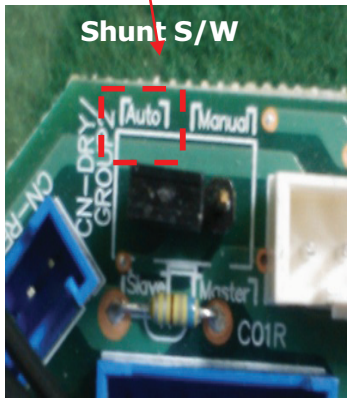

- Auto : Auto-Start
- Manual : Depends on how it is set by Remote Controller

▶ Case #2 : IDU PCB with Dip switch

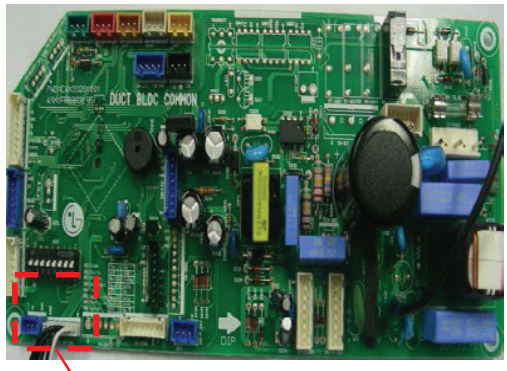

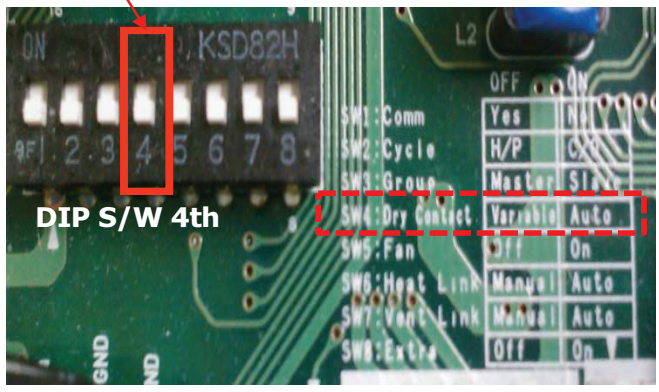

- On(Auto) : Auto-Start
- Off(Manual) : Depends on how it is set by Remote Controller

4.1 Dry Contact

■ Auto start mode / Manual mode Setting – Wired Remote Controller

• Standard Wired R/C

This function is available only for the products with dry contact device.

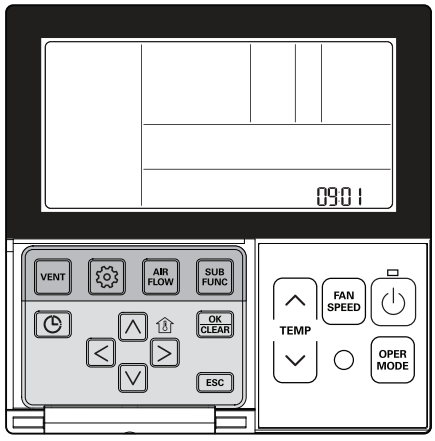

Press and hold ⚙ button for more than 3 seconds to enter the installer settings mode.

- If pressing only once briefly, it will enter the user settings mode.
  Make sure to press and hold for more than 3 seconds.

Move to the Dry Contact Mode Settings in the menu using ⚙ button and then it displays as below.

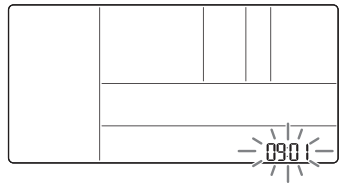

Select the Dry Contact Mode using ∧ ∨ button.

❊ Set value for dry contact
00 : Manual
01 : Auto

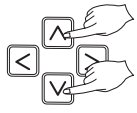

Press OK/CLEAR button to save the setting.

Press ESC button to exit.

❊ If no button is selected for about 25 seconds after setup, it exits the setup mode automatically.

❊ If the OK/CLEAR button is not selected before you exit, the changes will not apply.

• See the Dry Contact manual for more detailed functions about dry contact mode.

▶ **What is Dry Contact?**
It means a contact signal received when an air conditioner runs interlocking with hotel key card or sensor.

4.1 Dry Contact

• **Premium Wired R/C**

1. Press and hold 'wireless remote controller signal receiver part' of the remote controller for 3 seconds or longer to enter the installer function.
2. Select dry contact mode setting code value '09'.
3. At the Value 1 field, press the '▲', '▼' button to select dry contact setting value, and press 'Done' button to apply the dry contact mode setting.
   - If you do not press 'Done' button, your settings will not be applied.

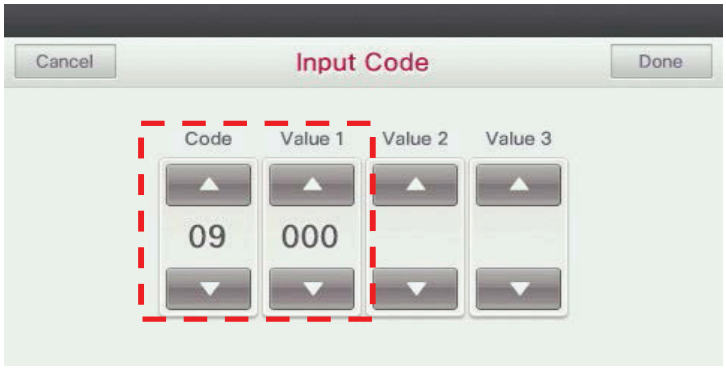

※ Dry contact setting value
- 00: manual
- 01: automatic

⚠ CAUTION

• When you set the Dry contact mode, you should make sure that **Dry Contact input is On(For example, Cardkey is injected)**

4.1 Dry Contact

■ Auto start mode / Manual mode Setting – Wireless Remote Controller

- It gives selection whether to turn ON the unit directly or not from the external source.
  The selection can be made by pressing CANCEL button of the wireless remote controller 3 times within 3 minutes of resetting the unit with facing it towards the unit. (This function availability depends on indoor unit model)

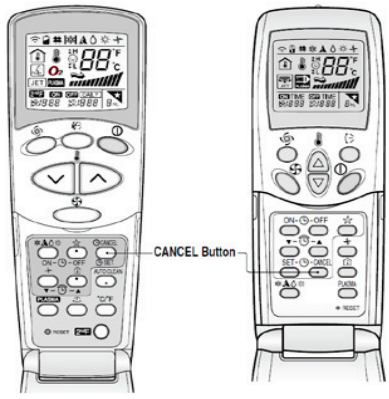

- 1m 30s after supplying power to IDU, press the Clear All button on R/C three times

- 1m 30s after supplying power to IDU, press the Set/Clear button on R/C three times.

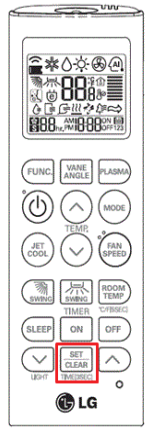

4.1 Dry Contact

Request: In a conference room of an hotel, It is necessary to synchronize the operation of the AC with the ERV.

Solution: Indoor unit dry contact PCB is connected with ERV forced operation contact.

<Conference Room>

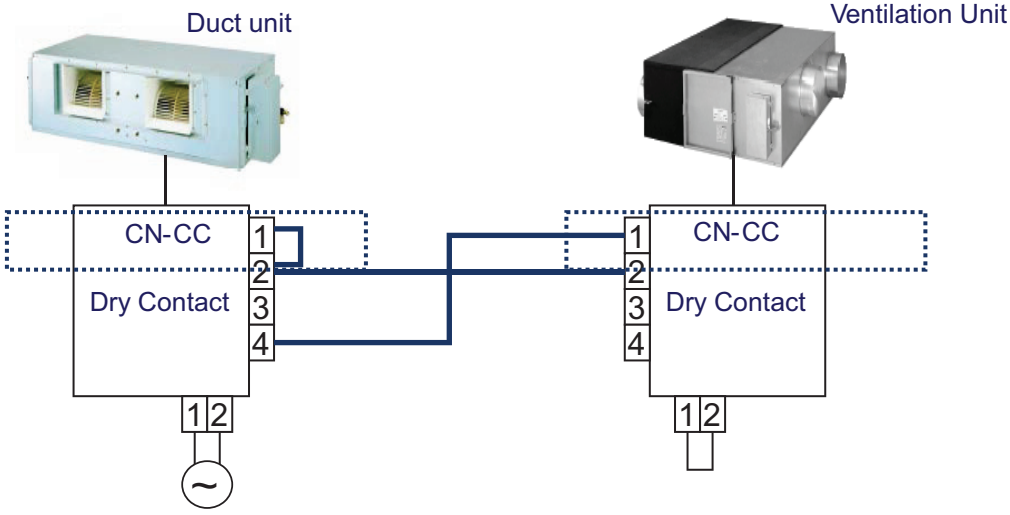

In this case when IDU is on, ERV starts(auto mode). And when IDU fan is Off, ERV is off

→ Check!! dip switch No.5 in ERV PCB
dip switch No.5 is ON then ERV will be auto start
dip switch No.5 is Off then ERV will be manual start(Remote controller enable)

4.1 Dry Contact

Request: The indoor unit should be controlled by external switches, and it needs to be off while window is opened.

Solution: Indoor unit is connected with a series of contacts.

<Hotel Room>

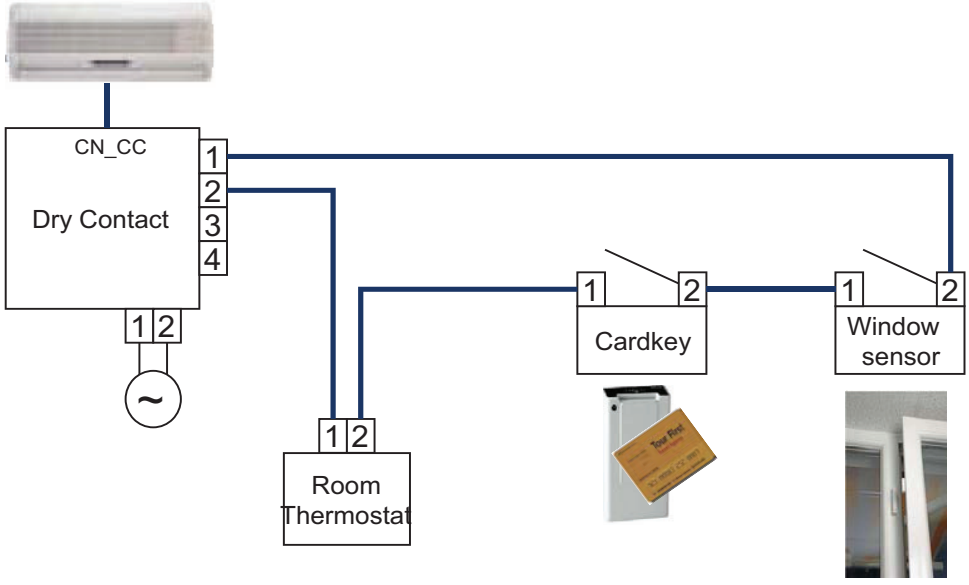

Request: The indoor unit should be on/off depending on human occupancy

Solution: Indoor unit can start/stop automatically by motion detector

<Classroom>

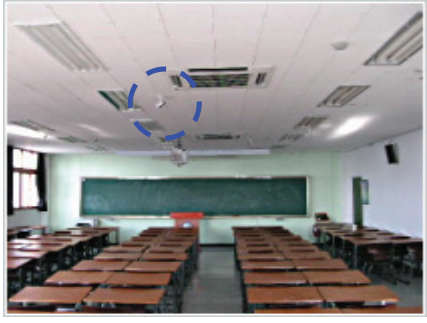

Motion detector in classroom

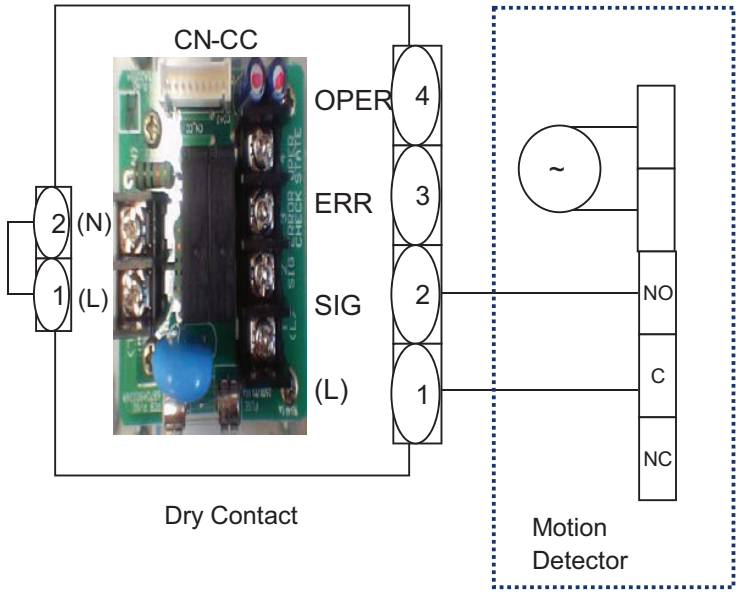

4.1 Dry Contact

4.1.3 PDRYCB300

- Dimensions: 120 X 120 X 36.5 mm
- Unit types : For Connect Indoor unit to Other Thermostat Controller.
  (Available from Multi V 2 series)
- No need AC input

Appearance	Connect		
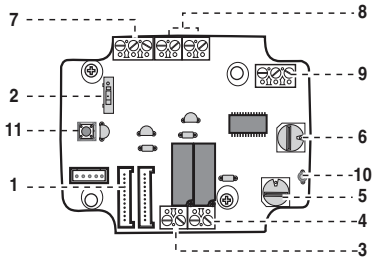	No.	Name	Function
	1	CN_INDOOR	Connector for indoor unit
	2	CHANGE_OVER_SW	Switch to select External Voltage or Non Voltage for input contact signal
	3	CN_OUT(O1,O2)	Output terminal to show whether the indoor unit is operating (Relay contact)
	4	CN_OUT(E3,E4)	Output terminal to show whether there is an error with the indoor unit (Relay contact)
	5	TEMP_SW	Switch to set the desired temperature of the indoor unit
	6	SETTING_SW	Switch to select whether to use set function of Dry contact
	7	CN_Ther/oper	Input terminal for thermo & operation signal
	8	CN_MODE	Input terminal for Mode signal
	9	CN_WIND	Input terminal for Wind signal
	10	DISPLAY_LED	LED to display the status of Dry contact Module
	11	RESET_SW	Reset switch

■ Accessory

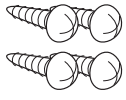

Screw
(For installation, 4EA)

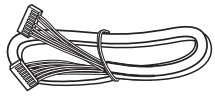

Cable 1EA
(for connecting with indoor unit)

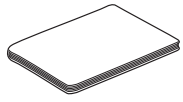

User/Installation Manual

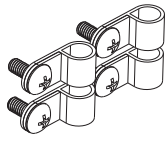

Clamp
(For installation, 4EA)

4.1 Dry Contact

■ Installation

- When using the Dry contact for communication independently

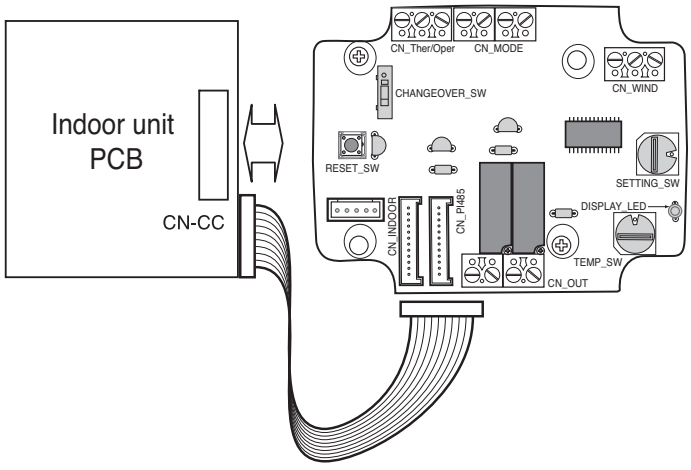

- For input contact closure only(No power input)

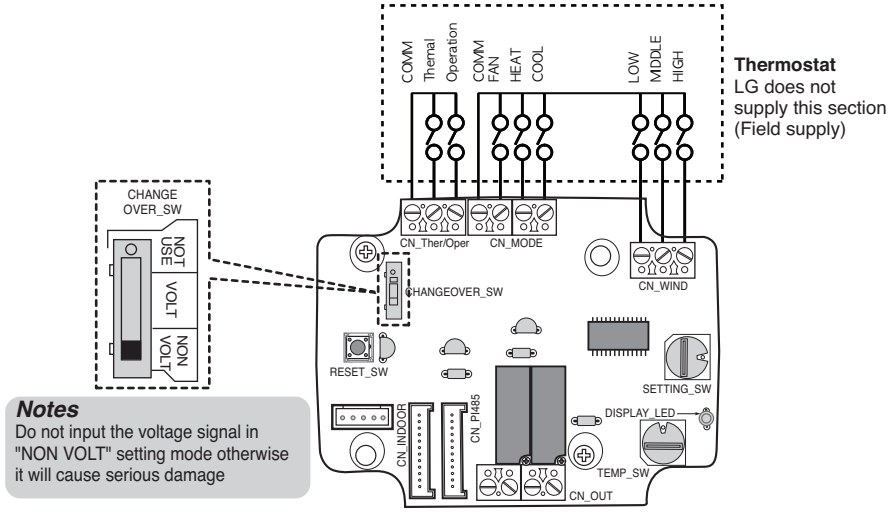

- For input contact voltage : 12 V⎓, 24 V~

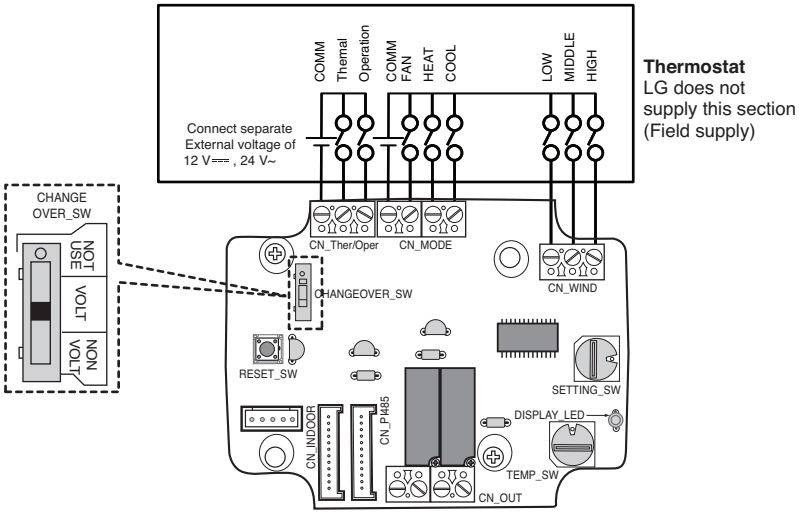

4.1 Dry Contact

■ Using 'SETTING_SW' , select the Option of control Function as described below.

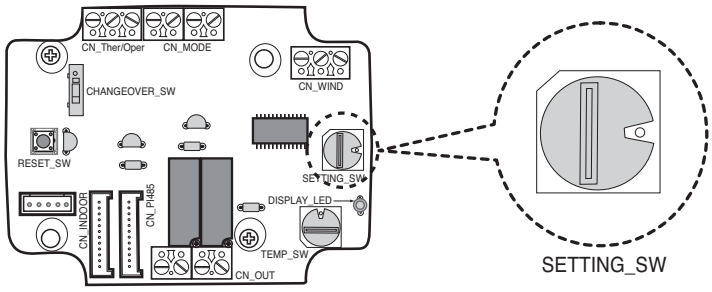

<SETTING_SW Function>

No.	WIND Signal en/disable	Thermal en/disable	Oper Mode en/disable	Dry Contact Control Priority
0	Disable	Disable	Disable	Disable
1	Disable	Disable	Disable	Enable[4)]
2	Disable	Disable	Enable[3)]	Disable
3	Disable	Disable	Enable	Enable
4	Disable	Enable[2)]	Disable	Disable
5	Disable	Enable	Disable	Enable
6	Disable	Enable	Enable	Disable
7	Disable	Enable	Enable	Enable
8	Enable [1)]	Disable	Disable	Disable
9	Enable	Disable	Disable	Enable
A	Enable	Disable	Enable	Disable
B	Enable	Disable	Enable	Enable
C	Enable	Enable	Disable	Disable
D	Enable	Enable	Disable	Enable
E	Enable	Enable	Enable	Disable
F	Enable	Enable	Enable	Enable

1) Enable CN_WIND signal – Amount of wind flow (Low, Middle, High) signal enable
2) Enable Thermo ON/OFF input signal
- Desired Temperature 18 °C in cooling mode
- Desired Temperature 30 °C in heating mode
- No function in FAN mode
3) Enable CN_MODE signal – Operation mode (Cool, Heat, Fan) signal enable
4) Enable Thermostat priority control mode – Indoor's remote-controller signal will be disregarded

4.1 Dry Contact

■ Function table for the selection of 'SETTING_SW' and the input signal

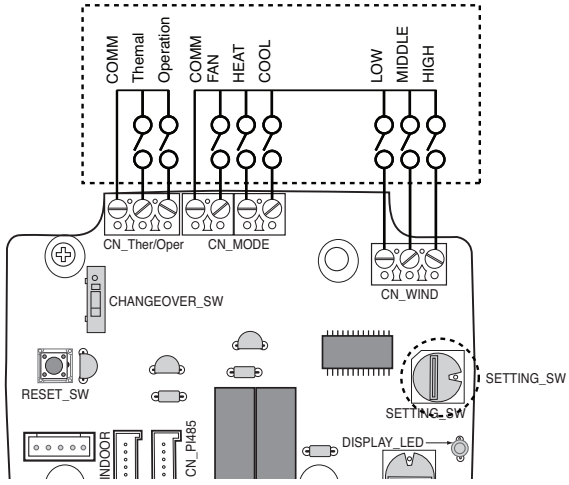

SETTING_SW	CN_MODE input			Function
	FAN	HEAT	COOL	
2,3,6,7,A,B,E,F	0	0	0	NA
	0	0	1	COOL
	0	1	0	HEAT
	0	1	1	NA
	1	0	0	FAN
	1	0	1	NA
	1	1	0	NA
	1	1	1	NA
Others	-	-	-	NA

SETTING_SW	CN_WIND input			Function
	Low	Middle	High	
8,9,A,B,C,D,E,F	0	0	0	NA
	0	0	1	High
	0	1	0	Middle
	0	1	1	NA
	1	0	0	Low
	1	0	1	NA
	1	1	0	NA
	1	1	1	NA
Others	-	-	-	NA

SETTING_SW	CN_Ther/Oper input		Function
	Thermal	Operation	
4,5,6,7,C,D,E,F	0	0	Thermal Off + Stop
	0	1	Thermal Off + Run
	1	0	Thermal On + Stop
	1	1	Thermal On + Run
Others	-	-	NA

4.1 Dry Contact

■ When setting the desired temperature of the Dry contact Module

: When operating the indoor unit using Dry contact module's desired temperature, set the desired temperature according to the 'TEMP_SW' setting.
If Thermostat priority control mode is disabled, the desired temperature can be reset by other controller

• Use the 'TEMP_SW' to set the temperature as shown below.

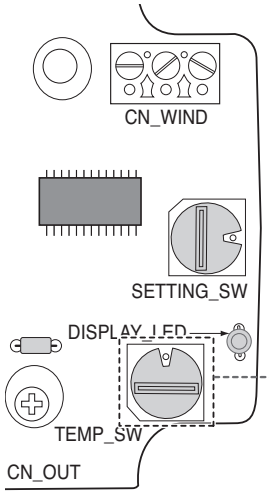

TEMP (°C)	Not use Dry Contact module's Desired temp function	18	19	20	21	22
'TEMP SW' setting	0	1	2	3	4	5

TEMP (°C)	23	24	25	26	27	28	29	30
'TEMP SW' setting	6	7	8	9	A	B	C	D

*. E, F : Reserved

■ When interlocking with thermostat, select the option of control function as described below.

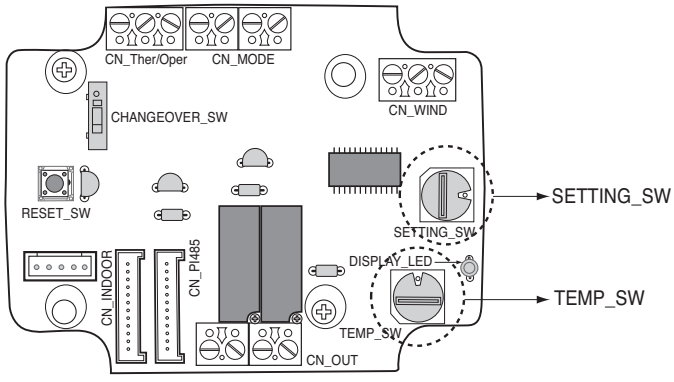

<Switch Function>

TEMP_SW	SETTING_SW	Thermostat mode	WIND Signal en/disable
F	8, 9, E, F	Conventional AC Unit Thermostat	Disable
	0, 1, 6, 7		Enable
	A, B	Heat Pump Thermostat_O Terminal	Disable
	2, 3		Enable
	C, D	Heat Pump Thermostat_B Terminal	Disable
	4, 5		Enable

1) When interlocking with thermostat, set TEMP_SW to F.
2) Enable CN_WIND signal – Amount of wind flow(Low, Middle, High) signal enable

4.1 Dry Contact

■ For conventional thermostat signal input

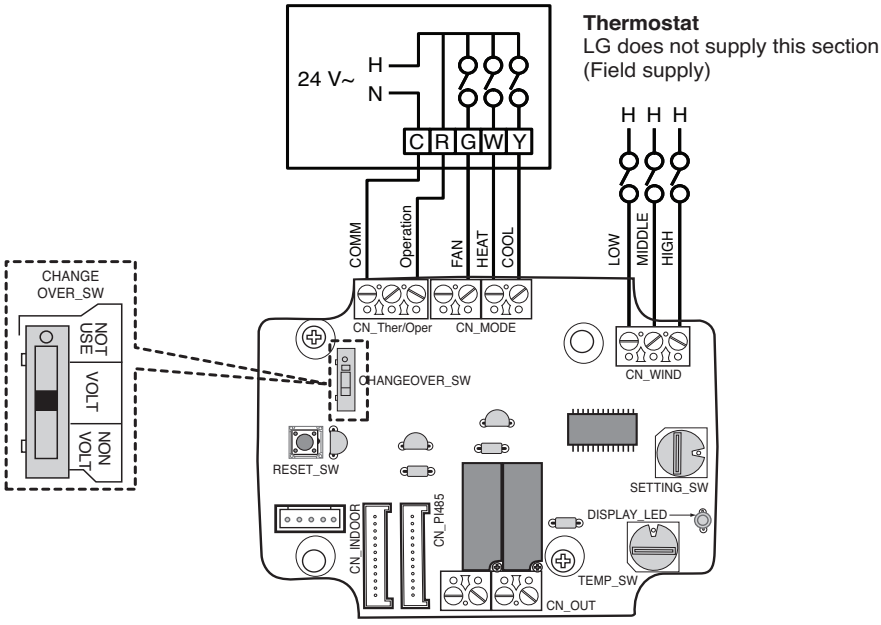

Thermostat Fan & System Switch			Input				IDU Response [Mode / Thermal / Fan]
FAN [Auto / On]	MODE [Cool / Heat / Off]		Operation	FAN [G]	HEAT [W]	COOL [Y]	
-	-	-	0	-	-	-	Disable Operation
Auto	OFF	-	1	0	0	0	Off
	Cool	RT > SP	1	1	0	1	Cool / On / On
		RT < SP	1	0	0	0	Enable
	Heat	RT < SP	1	1	1	0	Heat / On /On
		RT > SP	1	0	0	0	Off
ON	FAN	-	1	1	0	0	Fan / Off / On
	Cool	RT > SP	1	1	0	1	Cool / On/ On
		RT < SP	1	1	0	0	Fan / Off / On
	Heat	RT < SP	1	1	1	0	Heat / On / On
		RT > SP	1	1	0	0	Fan / Off / On

❊ RT : Room Temperature
❊ SP : Set Point

4.1 Dry Contact

■ For heat pump thermostat with O terminal signal input

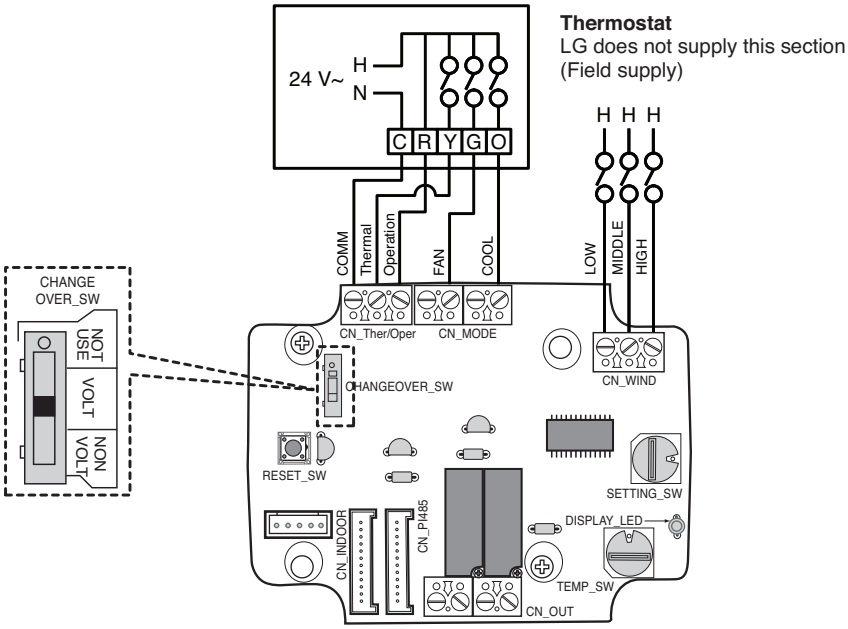

Thermostat Fan & System Switch			Input				IDU Response [Mode / Thermal / Fan]
FAN [Auto / On]	MODE [Cool / Heat / Off]		Operation	Thermal [Y]	FAN [G]	COOL [O]	
-	-	-	0	-	-	-	Disable Operation
Auto	OFF	-	1	0	0	0	Off
	Cool	RT > SP	1	1	0	1	Cool / On / On
		RT < SP	1	0	0	1	Off
	Heat	RT < SP	1	1	0	0	Heat / On / On
		RT > SP	1	0	0	0	Off
ON	FAN	-	1	0	1	0	Fan / Off / On
	Cool	RT > SP	1	1	1	1	Cool / On / On
		RT < SP	1	0	1	1	Fan / Off / On
	Heat	RT < SP	1	1	1	0	Heat / On / On
		RT > SP	1	0	1	0	Fan / Off / On

❊ RT : Room Temperature
❊ SP : Set Point

4.1 Dry Contact

■ For heat pump thermostat with B terminal signal input

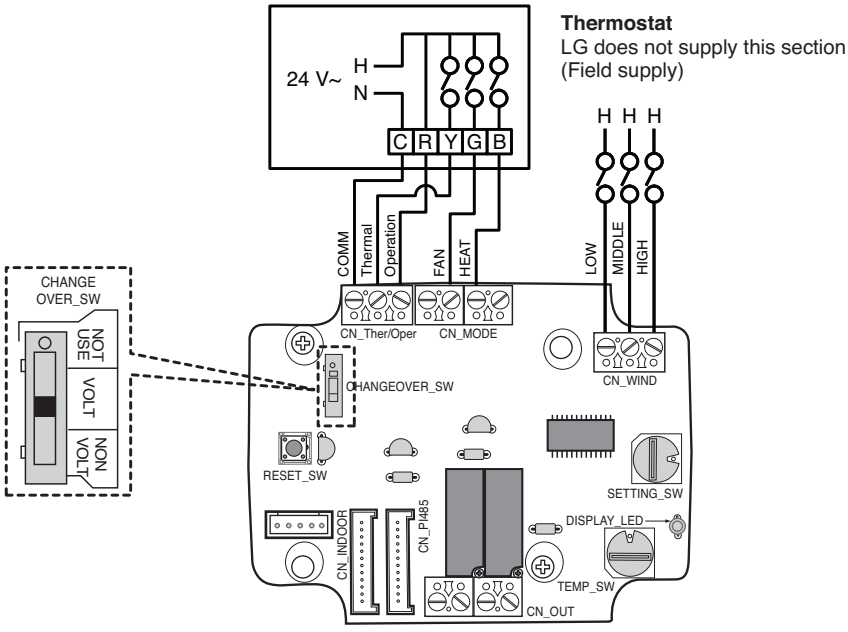

Thermostat Fan & System Switch			Input				IDU Response [Mode / Thermal / Fan]
FAN [Auto / On]	MODE [Cool / Heat / Off]		Operation	Thermal [Y]	FAN [G]	HEAT [B]	
-	-	-	0	-	-	-	Disable Operation
Auto	OFF	-	1	0	0	0	Off
	Cool	RT > SP	1	1	0	0	Cool / On / On
		RT < SP	1	0	0	0	Off
	Heat	RT < SP	1	1	0	1	Heat / On / On
		RT > SP	1	0	0	1	Off
ON	OFF	-	1	0	1	0	Fan / Off / On
	Cool	RT > SP	1	1	1	0	Cool / On / On
		RT < SP	1	0	1	0	Fan / Off / On
	Heat	RT < SP	1	1	1	1	Heat / On / On
		RT > SP	1	0	1	1	Fan / Off / On

❊ RT : Room Temperature
❊ SP : Set Point

4.1.4 PDRYCB300 (Dry Contact for Thermostat)

• **Feature**

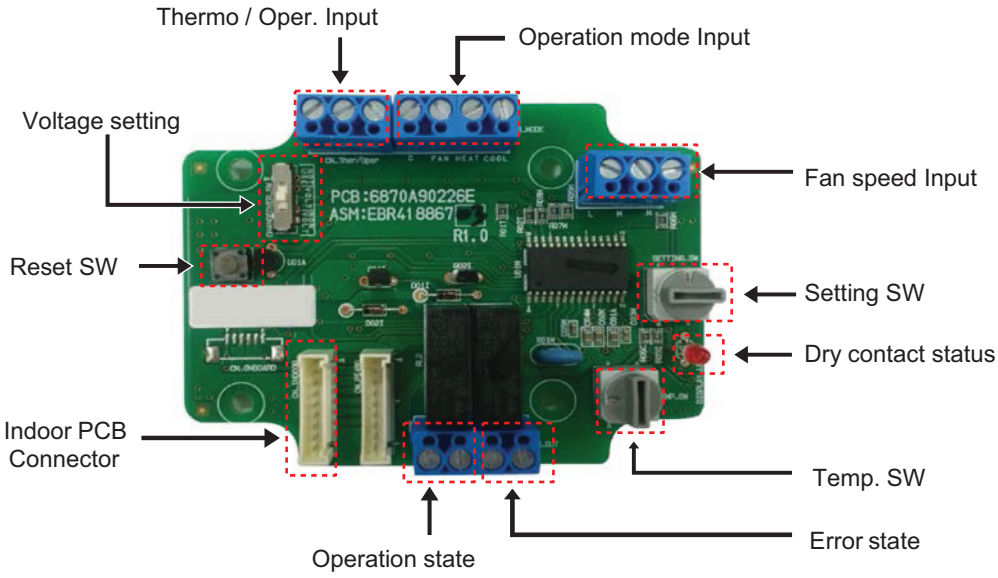

• **Wiring**

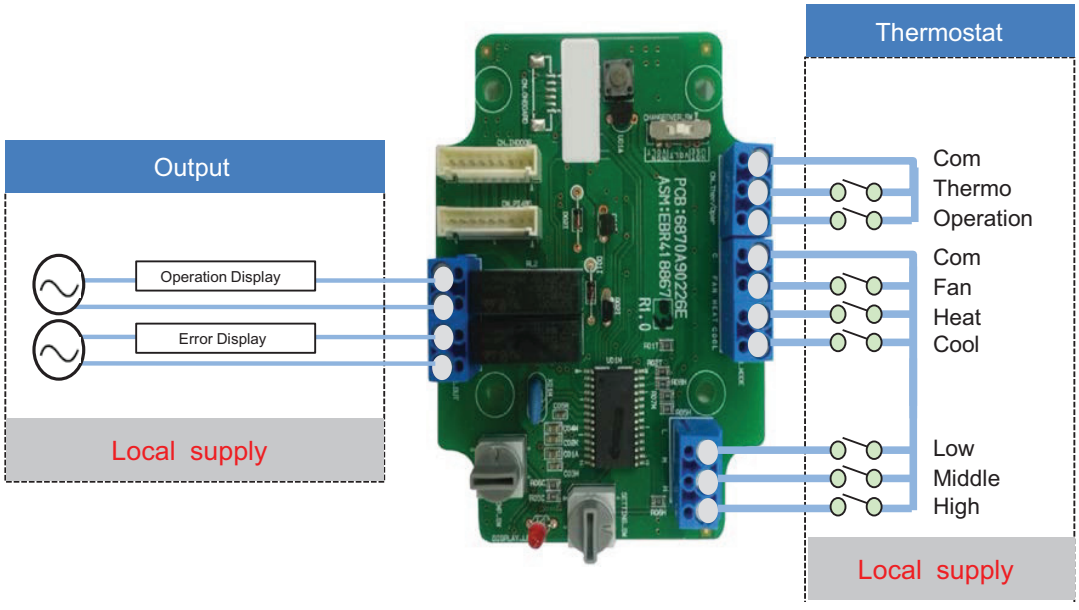

* Depending on different thermostat models, wiring can be different from others

4.1 Dry Contact

• Voltage / Non Voltage setting for Input signal

▶ Non Voltage setting

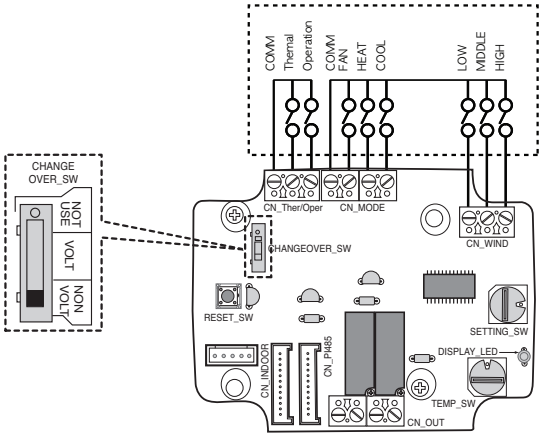

▶ Voltage setting : 12 V⎓ (3A), 24V~ (3A)

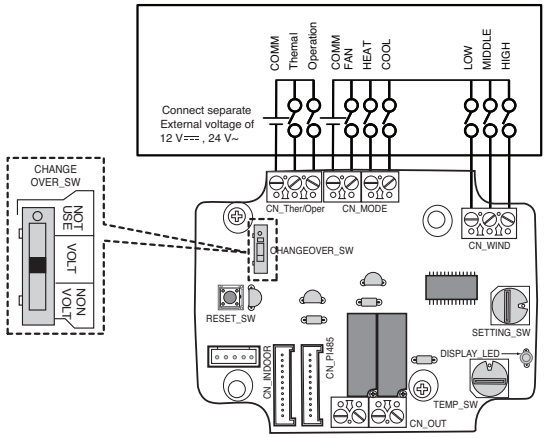

• Setting SW – Enable/Disable each of input signals

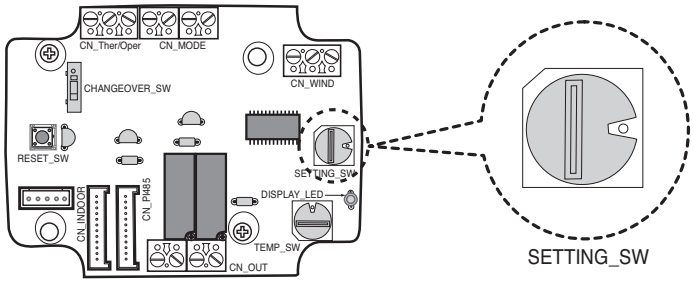

* Thermal On : This input will change automatically desired temperature
Desired Temp. 18 in cooling mode
Desired Temp. 30 in heating mode
No function in FAN mode

No.	Fan Speed	Thermo On/Off	Operation Mode	Dry Contact Control Priority
0	Disable	Disable	Disable	Disable
1				Enable
2			Enable	Disable
3				Enable
4		Enable	Disable	Disable
5				Enable
6			Enable	Disable
7				Enable
8	Enable	Disable	Disable	Disable
9				Enable
A			Enable	Disable
B				Enable
C		Enable	Disable	Disable
D				Enable
E			Enable	Disable
F				Enable

4.1 Dry Contact

• **Setting SW – Enable/Disable each of input signals**

SETTING_SW	CN_MODE input			Function
	FAN	HEAT	COOL	
2,3,6,7,A,B,E,F	0	0	0	NA
	0	0	1	COOL
	0	1	0	HEAT
	0	1	1	NA
	1	0	0	FAN
	1	0	1	NA
	1	1	0	NA
	1	1	1	NA
Others	-	-	-	NA
SETTING_SW	CN_WIND input			Function
	Low	Middle	High	
8,9,A,B,C,D,E,F	0	0	0	NA
	0	0	1	High
	0	1	0	Middle
	0	1	1	NA
	1	0	0	Low
	1	0	1	NA
	1	1	0	NA
	1	1	1	NA
Others	-	-	-	NA
SETTING_SW	CN_Ther/Oper input			Function
	Thermal	Operation		
4,5,6,7,C,D,E,F	0	0		Thermal Off + Stop
	0	1		Thermal Off + Run
	1	0		Thermal On + Stop
	1	1		Thermal On + Run
Others	-	-		NA

<Switch Function>

TEMP_SW	SETTING_SW	Thermostat mode	WIND Signal en/disable
F	8, 9, E, F	Conventional AC Unit Thermostat	Disable
	0, 1, 6, 7		Enable
	A, B	Heat Pump Thermostat_O Terminal	Disable
	2, 3		Enable
	C, D	Heat Pump Thermostat_B Terminal	Disable
	4, 5		Enable

4.1 Dry Contact

• **Usage Example**

- In case of on/off sensor

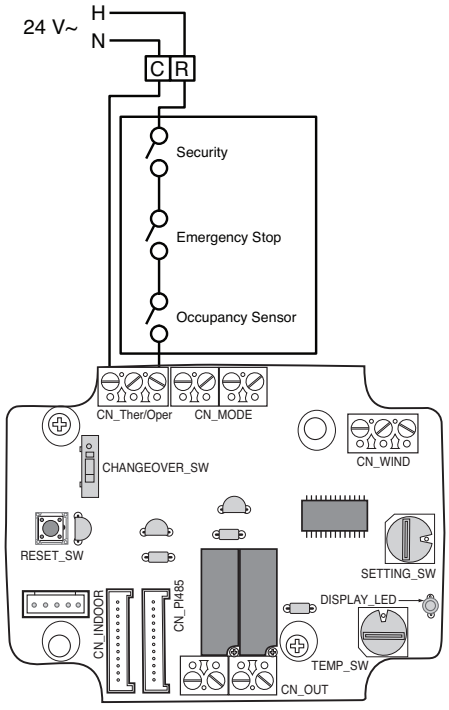

- With Conventional thermostat

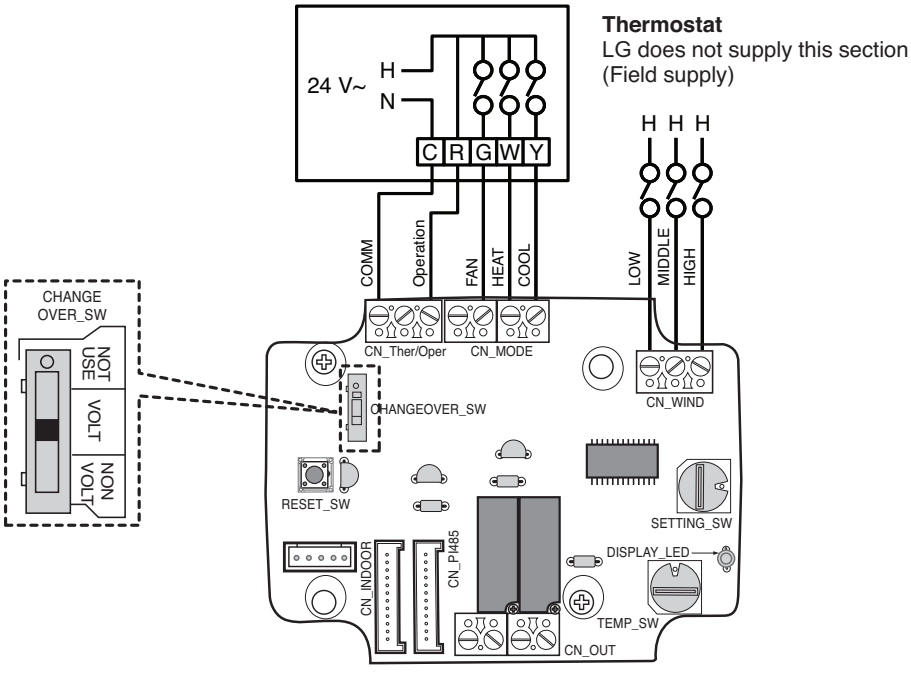

4.1 Dry Contact

4.1.5 PDRYCB400

- Dimensions: 120 X 120 X 36.5 mm
- Unit types : For Connect Indoor unit to other Forced on/off Controller. (Available from Multi V 2 series)
- No need AC input

Appearance	Connect		
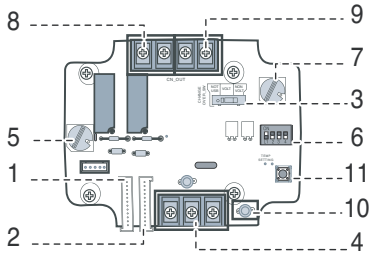	No.	Name	Function
	1	CN_INDOOR	Connector for indoor unit
	2	CN_PI485	PI485 connector
	3	CHANGE_OVER_SW	Switch to select voltage (5V-12V) of contact point
	4	CN_CONTROL	Contact point signal input
	5	CONTROL_MODE_SW	Switch to select the control mode
	6	SETTING_SW	Switch to select whether to use set function of Dry contact for setback
	7	TEMP_SETTING	Switch to set the desired temperature of the indoor unit
	8	CN_OUT (O1, O2)	Connector to show whether the indoor unit is operating
	9	CN_OUT (E3, E4)	Connector to show whether there is an error with the indoor unit
	10	DISPLAY_LED	LED to display the status of the Dry Contact For Setback
	11	RESET_SW	Reset switch

■ Accessory

Cable 1EA
(for connecting with indoor unit)

*Other : Screw (For installation, 4EA)
*Other : Clamp (For installation, 4EA)

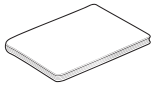

User/Installation Manual

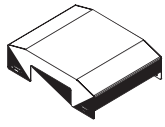

Metal Case (Front)

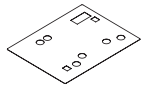

Isolation Sheet

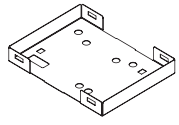

Metal Case (Rear)

Rubber

4.1 Dry Contact

■ Installation

• When using the Dry Contact For Setback independently

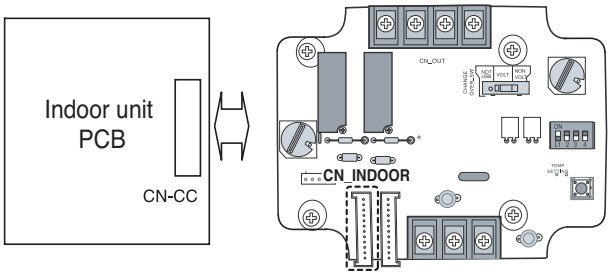

• When using with the central controller (Only when the indoor unit PCB is a non-communication model)

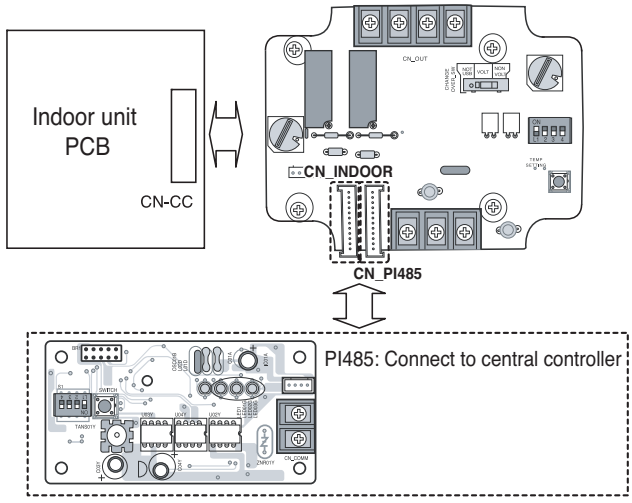

• For no power contact point signal input

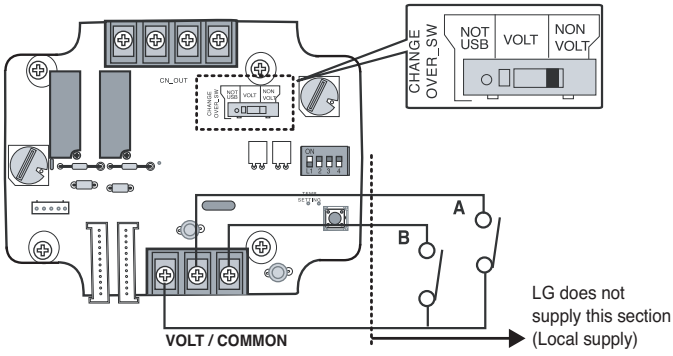

• For power contact point signal input

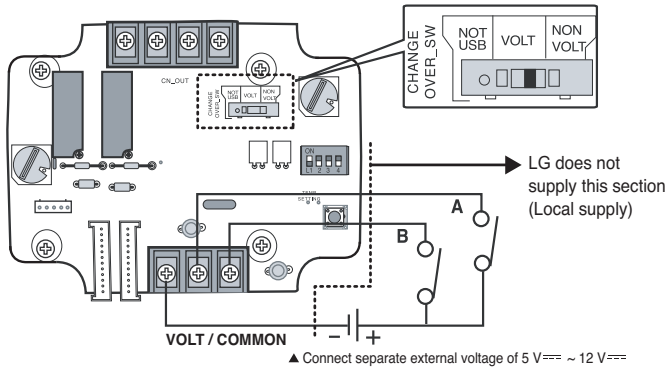

4.1 Dry Contact

■ Function List

• When setting the desired temperature of the Dry contact for Setback

: When operating the indoor unit, set the desired temperature according to the TEMP_SW setting.
When the indoor unit is unlocked, the desired temperature can be reset by other controller.

1) Turn on the TEMP_SETTING switch of SETTING_SW.

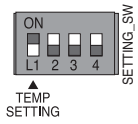

2) Use the TEMP_SW to set the temperature as shown below.

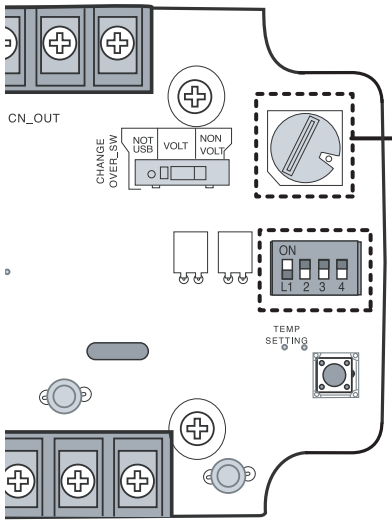

Desired temperature setting table

TEMP SW setting	0	1	2	3	4	5	6	7
Temperature setting(°C)	18	19	20	21	22	23	24	25

TEMP SW setting	8	9	A	B	C	D	E	F
Temperature setting(°C)	26	27	28	29	30	30	30	30

• When not using the desired temperature setting of Dry contact for Setback

1) Turn off the TEMP_SETTING switch of SETTING_SW.

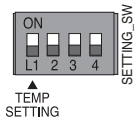

• Use the CONTROL_MODE_SW to set the control mode you want from 0 ~ E.

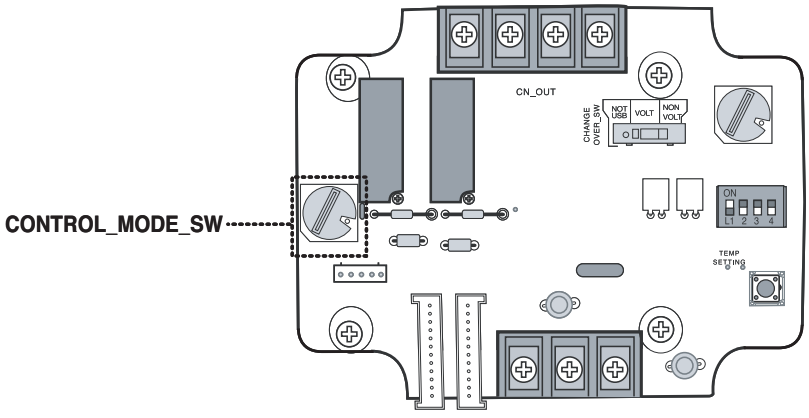

➲ Indoor control priority
Central control > Dry contact for communication > Wired/Wireless remote controller, indoor unit button
➲ Dry contact for communication controls the indoor unit according to the applicable mode when there is a change in input of A and B.

4.1 Dry Contact

• Description of each control mode

1) Cancel mode for use of dry contact for communication

CONTROL_ MODE S/W	Input A	Input B	Operating mode
0	OFF	OFF	The indoor unit cannot be controlled through the Dry contact for communication No change in indoor unit condition
	ON	OFF	
	OFF	ON	
	ON	ON	

➲ Set this when the Dry contact for communication is connected but not used.

2) General mode

CONTROL_ MODE S/W	Input A	Input B	Operating mode
1	OFF	OFF	Indoor unit stopped, locked
	ON	OFF	Indoor unit prior operating condition maintained, unlocked
	OFF	ON	Indoor unit stopped, locked
	ON	ON	Indoor unit stopped, locked
2	OFF	OFF	Indoor unit stopped, locked
	ON	OFF	Indoor unit operating, unlocked
	OFF	ON	Indoor unit stopped, locked
	ON	ON	Indoor unit stopped, locked
3	OFF	OFF	Indoor unit stopped, locked
	ON	OFF	Indoor unit stopped, locked
	OFF	ON	Indoor unit prior operating condition maintained, unlocked
	ON	ON	Indoor unit operating, unlocked
4	OFF	OFF	Indoor unit stopped, locked
	ON	OFF	Indoor unit stopped, locked
	OFF	ON	Indoor unit prior operating condition maintained, unlocked
	ON	ON	Indoor unit prior operating condition maintained, unlocked
5	OFF	OFF	Indoor unit prior operating condition maintained, locked
	ON	OFF	Indoor unit prior operating condition maintained, locked
	OFF	ON	Indoor unit prior operating condition maintained, locked
	ON	ON	Indoor unit prior operating condition maintained, unlocked
6	OFF	OFF	Indoor unit prior operating condition maintained, locked
	ON	OFF	Indoor unit prior operating condition maintained, locked
	OFF	ON	Indoor unit prior operating condition maintained, locked
	ON	ON	Indoor unit operating, unlocked

4.1 Dry Contact

3) Fan level setting mode

CONTROL_ MODE S/W	Input A	Input B	Operating mode
7	OFF	OFF	Indoor unit operating at low level, locked
	ON	OFF	Indoor unit operating at low level, unlocked
	OFF	ON	Indoor unit stopped, locked
	ON	ON	Indoor unit stopped, locked
8	OFF	OFF	Indoor unit operating at low level, locked
	ON	OFF	Indoor unit operating at low level, unlocked
	OFF	ON	Indoor unit stopped, locked
	ON	ON	Indoor unit prior operating condition maintained, unlocked

➲ **When the indoor unit is operating in Dry contact for communication, the fan level can be changed by other controller when the fan level is set to low level and the indoor is in unlocked condition.**

4) Power save mode

CONTROL_ MODE S/W	Input A	Input B	Operating mode
9	OFF	OFF	Indoor unit operating in power save mode, locked
	ON	OFF	Indoor unit operating in power save mode, unlocked
	OFF	ON	Indoor unit stopped, locked
	ON	ON	Indoor unit operating not in power save mode, unlocked
A	OFF	OFF	Indoor unit operating in power save mode, locked
	ON	OFF	Indoor unit operating in power save mode, unlocked
	OFF	ON	Indoor unit stopped, locked
	ON	ON	Indoor unit stopped, locked

➲ **When setting 9, A mode, the TEMP_SETTING must always be set to ON.**
➲ **Power save mode: Adjust the set temperature to +3°C for cooling and -3°C for heating.**

4.1 Dry Contact

5) Compressor stop mode

CONTROL_ MODE S/W	Input A	Input B	Operating mode
B	OFF	OFF	Indoor unit operating (Compressor in stop mode), locked
	ON	OFF	Indoor unit prior operating condition maintained (Compressor not in stop mode), unlocked
	OFF	ON	Indoor unit stopped, locked
	ON	ON	Indoor unit stopped, locked

➲ **Compressor stop mode: The compressor is stopped during cool/heat operation.**

6) Operating mode selection mode

CONTROL_ MODE S/W	Input A	Input B	Operating mode
C	OFF	OFF	Indoor unit stopped, unlocked
	ON	OFF	Indoor unit in cool/high operation, unlocked
	OFF	ON	Indoor unit in heat/high operation, unlocked
	ON	ON	Indoor unit in fan/high operation, unlocked
D	OFF	OFF	Indoor unit stopped, unlocked
	ON	OFF	Indoor unit in cool/high operation, unlocked
	OFF	ON	Indoor unit in heat/high operation, unlocked
	ON	ON	Indoor unit in fan/high operation, unlocked

➲ **Power save mode: Adjust the set temperature to +3°C for cooling and -3°C for heating.**

4.1 Dry Contact

■ Usage example

• **Pre-Cooling**

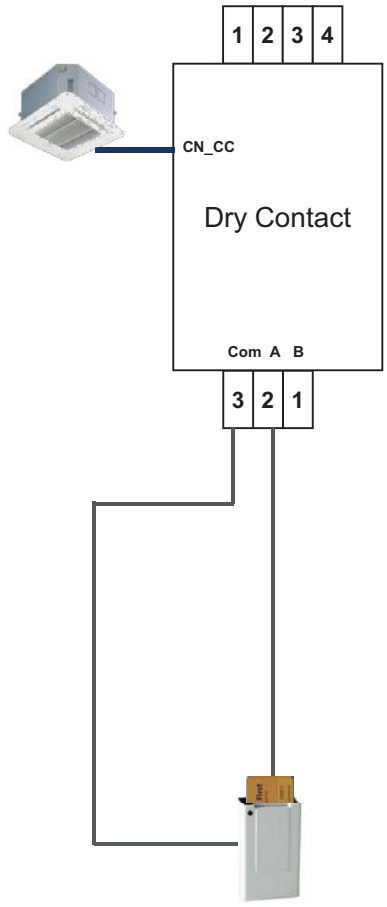

Setting

Switch Name	Setting
CONTROL MODE	7
Temp. Setting	A (28℃)

Operation Scenario

SW_A	SW_B	Function
OFF	OFF	Operating with 28℃ & low level, Locked (Remote controller is now allowed to control IDU)
ON	OFF	Operating with 28℃ & low level, Unlocked (User can step down desired temp. by Remote controller)
OFF	ON	Stop
ON	ON	Stop

4.1 Dry Contact

• **Emergency stop**

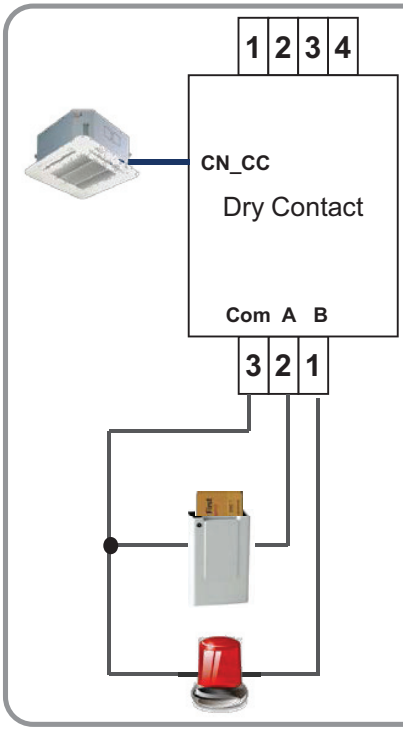

Setting

Switch Name	Setting
CONTROL MODE	2

Operation Scenario

SW_A	SW_B	Function
OFF	OFF	Stop
ON	OFF	Operating
OFF	ON	Stop
ON	ON	Stop

• **Mode Selector**

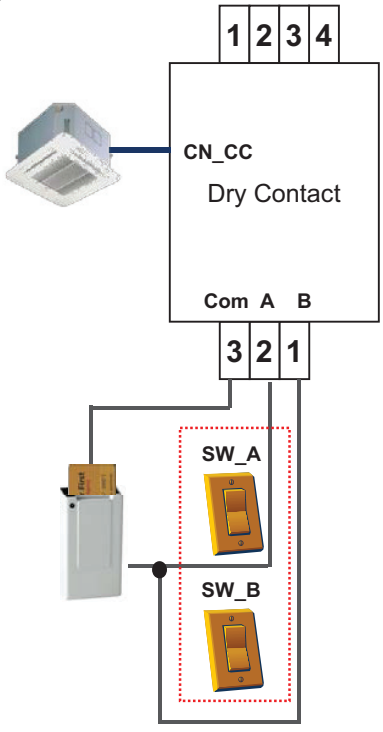

Only a manager can control this switch

Setting

Switch Name	Setting
CONTROL MODE	C or D

Operation Scenario

SW_A	SW_B	Function
OFF	OFF	Stop
ON	OFF	Cool Mode
OFF	ON	Heat Mode
ON	ON	FAN Mode

4.1 Dry Contact

4.1.6 PDRYCB500

- Dimensions: 120 X 120 X 36.5 mm
- Unit types : For Connect Indoor unit to external controller.
  (Available from Multi V 2 series)
- No need AC input

Appearance	Connect		
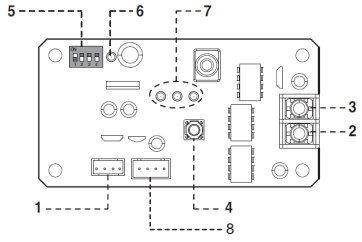	No.	Name	Function
	1	CN-OUT	Indoor Unit Connector
	2	BUS-A	RS485(+) Terminal
	3	BUS-B	RS485(-) Terminal
	4	SW1	Reset Switch
	5	SWDIP	Setting Address Switch
	6	LED1	RS485 Status LED
	7	LED(01~03)G	Communication Status LED
	8	CN-JIG	Connector for expanding the raddress range

■ Accessory

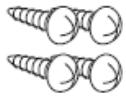

Screw
(For installation, 4EA)

Cable(1 EA)
(For Connecting with indoor unit)

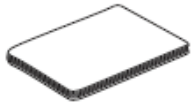

User/Installation Manual

Clamp
(For installation, 4EA)

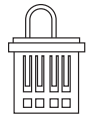

Connector (1 EA)
(For expanding address range)

4.1 Dry Contact

■ Specification

1) Modbus configuration
- Network : 2 wire RS485
- Mode : Modbus RTU slave
- Baud : 9600
- Parity : None
- Stop bits : 1
- Register Base : 0

2) Data registers

Function code	Register	Address	Name	Range	Notes
01(read)/05(write)	00001	0x0000	Operation	0~1	0: Stop 1: Run
04(read)	30001	0x0000	Pipe in temprature	-300~1120	Degrees (°C) × 10
04(read)	30002	0x0001	Pipe out temperature	-300~1120	Degrees (°C) × 10
04(read)	30003	0x0002	Indoor temperature	100~400	Degrees (°C) × 10
04(read)	30100	0x0063	Error code	0~999	0: No error 1~999: Error code
03(read)/06(write)	40001	0x0000	Set run mode (aircon)	0~4	0: Cool 2: Fan 3: Auto 4: Heat
03(read)/06(write)	40002	0x0001	Set temperature	180~300	Degrees (°C) × 10
03(read)/06(write)	40003	0x0002	Set run mode (ventilation)	0~2	0: Heat exchange 1: Auto 2: Bypass
03(read)/06(write)	40004	0x0003	Set sub operation (ventila-tion)	0~2	0: Off 1: Fast 2: Energy saving
03(read)/06(write)	40015	0x000E	Set fan speed	1~3	1: Low 2: Middle 3: High 4: Auto 7: Super High

❊ Above function may not work in some products.

4.1 Dry Contact

■ Installation

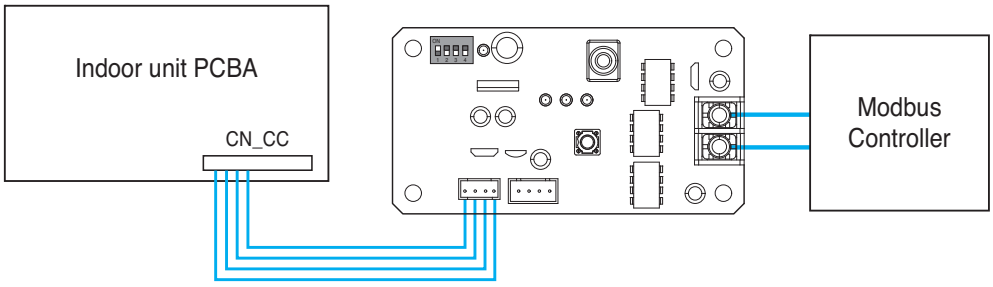

■ Address Setting

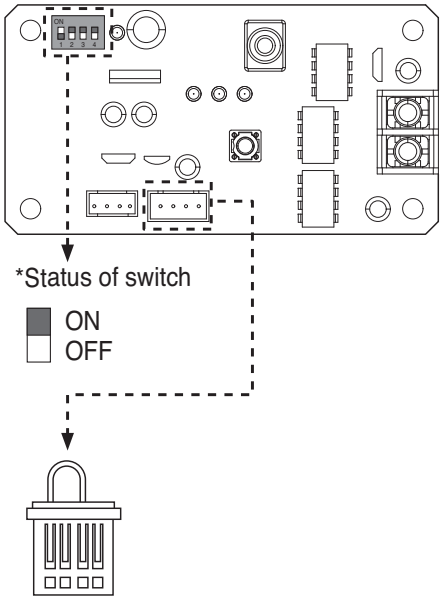

- Not attached(default): 1~8
- Attached(expanding address range): 9~16 (After 2018)

* /Number: Address when connector is attached

❊ **In case, connect a Modbus controller with several product, Address have to be set different from others.**

❊ **If the connector is attached to 'CN-JIG', the address range is expanded. (Please attach the connector before turning on the product.)**

4.1.7 PQDSBCDVM0 (Dry contact for Outdoor Demand control)

* Note : This dry contact Module is available for MultiV III series.

1) Model name : PQDSBCDVM0

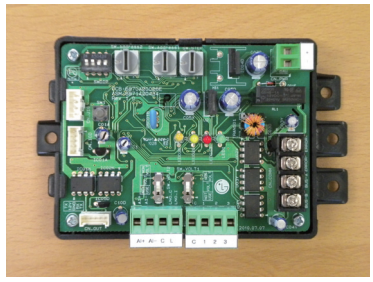

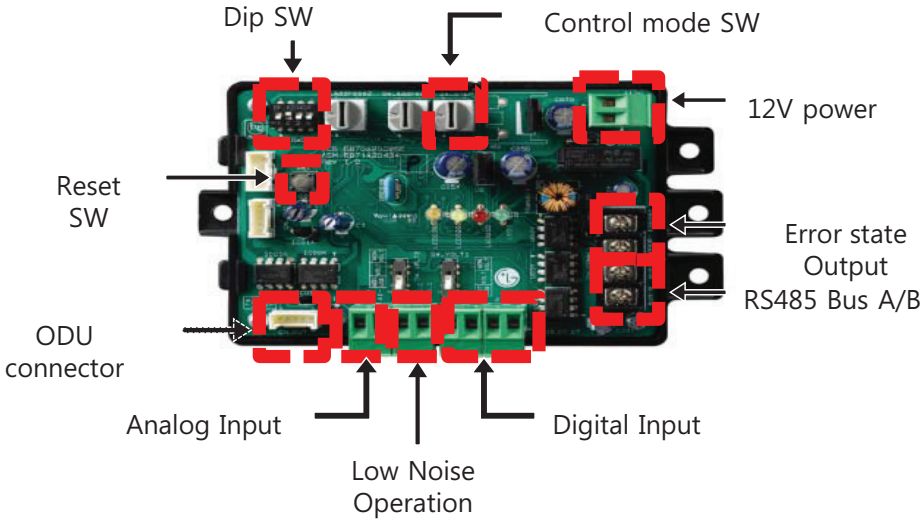

2) Specification
Applied Model : Over Multi V 3 Series
Function : - Demand control (3 contact signal)
- Demand control (Co-work with DDC)
- ODU fan low speed control (Night low noise operation)
- All Off
- Error Output (Display)

• **Overview**

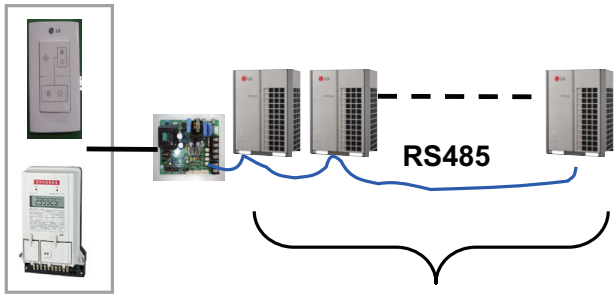

4.1 Dry Contact

• **System structure**

When outdoor unit has RS485 communication function (Master Mode)	When outdoor unit doesn't have RS485 communication function (Slave Mode)
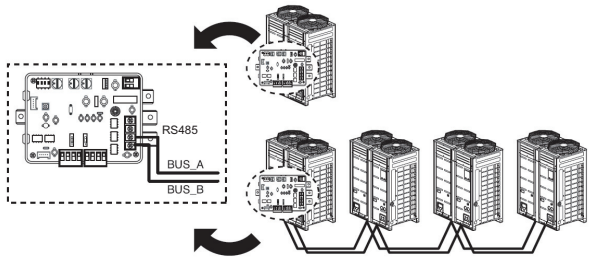	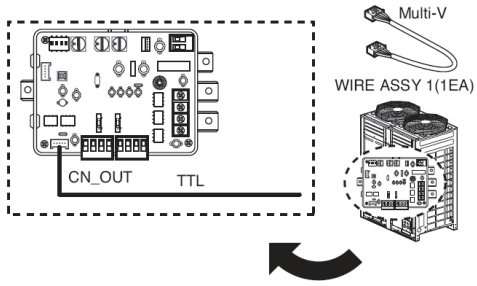
When using ODU Dry contact with Central Control Devices (Slave Mode)	
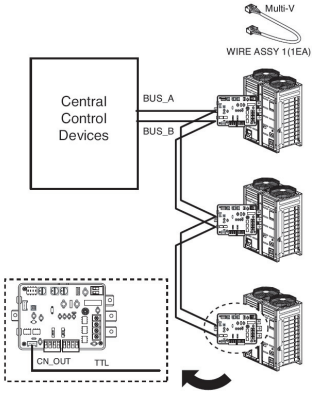	

• **System structure**

When outdoor unit has RS485 communication Function (RS485 Built-in model	When outdoor unit doesn't have RS485 communication function
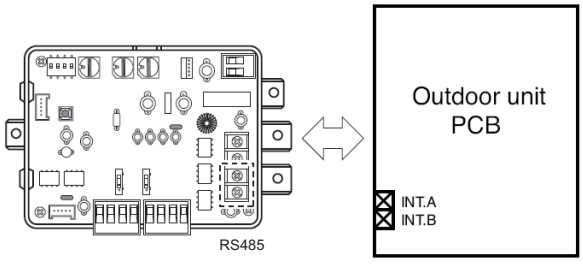	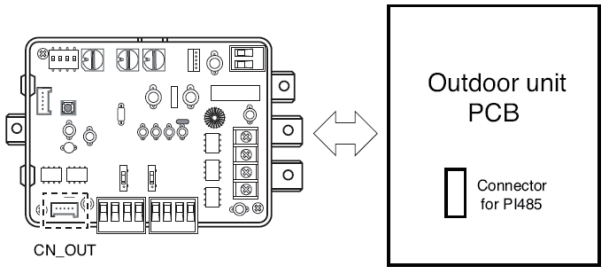

4.1 Dry Contact

• **Setting of input signal**

When using contact signal input without external power

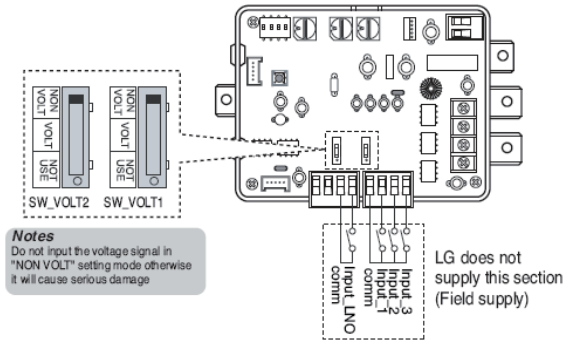

When using contact signal input with external power

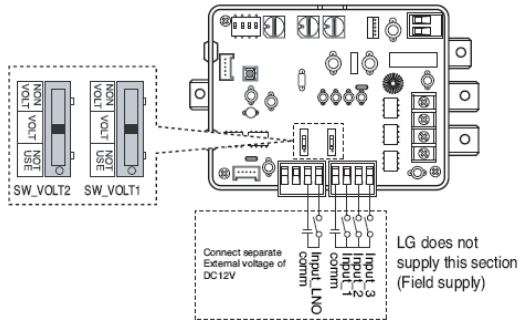

When using analog input signal

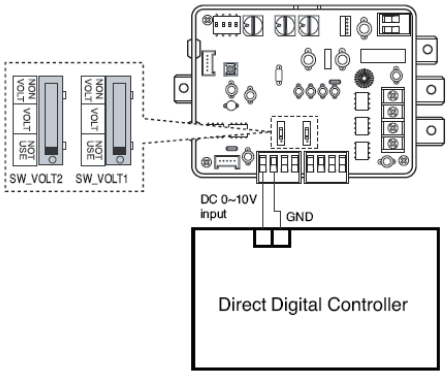

• **Setting of 'SWDIP'**

* Using 'SWDIP', select the option of control function as described below

SWDIP	Function
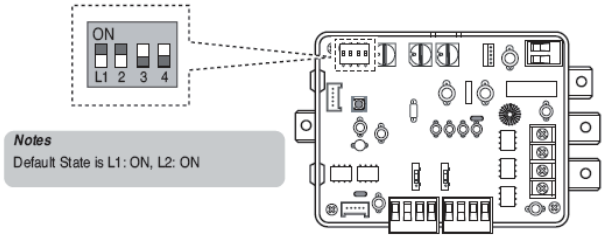	

Position	Function
ON L1 2 3 4	ON : Master Mode OFF : Slave Mode
ON L1 2 3 4	ON : Enable Low Noise Operation OFF : Disable Low Noise Operation
ON L1 2 3 4	No Function
ON L1 2 3 4	ON : On Boarding Mode OFF : No Funcion

4.1 Dry Contact

• **Setting of 'SW_STEP'**

* Use the 'SW_SETP' to set a control step for contact signal input.

SW_STEP

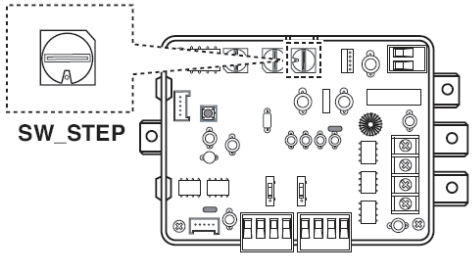

Contact signal input (Mode 0~6)

SW_ STEP	Input_1	Input_2	Input_3	Comp capacity Of outdoor unit(%)
0	0	0	0	No control
	1	0	0	70
	0	1	0	40
	0	0	1	COMP OFF
1	0	0	0	No control
	1	0	0	70
	0	1	0	50
	0	0	1	COMP OFF
2	0	0	0	No control
	1	0	0	80
	0	1	0	50
	0	0	1	COMP OFF
3	0	0	0	No control
	1	0	0	70
	0	1	0	40
	0	0	1	ALL OFF
4	0	0	0	No control
	1	0	0	70
	0	1	0	50
	0	0	1	ALL OFF
5	0	0	0	No control
	1	0	0	80
	0	1	0	50
	0	0	1	ALL OFF
6	0	0	0	No control
	1	0	0	50
	0	1	0	COMP OFF
	0	0	1	ALL OFF

4.1 Dry Contact

Analog signal input (Mode 0~6)

SW_ STEP	Input Voltage	Comp capacity Of outdoor unit(%)	Type of input
D	0	No control	Analog input
	1	100	
	2	90	
	3	80	
	4	70	
	5	60	
	6	50	
	7	45	
	8	40	
	9	COMP OFF	
	10	ALL OFF	
E	0	COMP OFF	
	1	40	
	2	45	
	3	50	
	4	60	
	5	70	
	6	80	
	7	90	
	8	100	
	9	100	
	10	100	

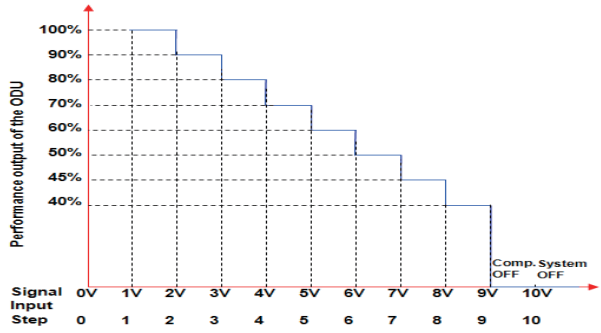

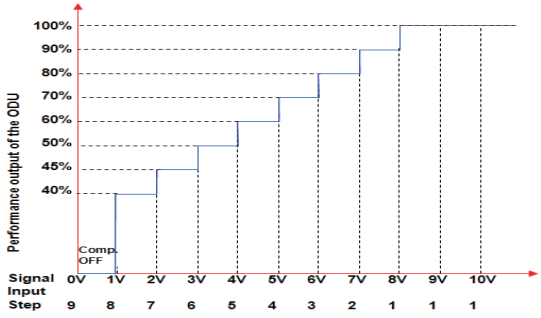

• **Low Noise Operation**

Night low noise operation

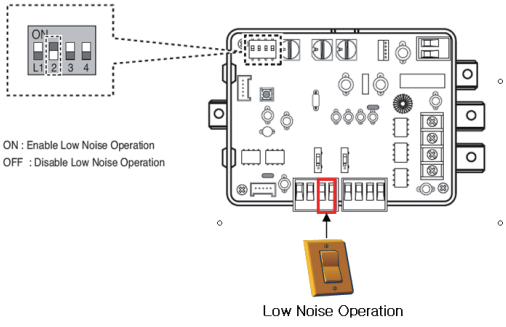

4.2 Remote Temperature Sensor

4.2.1 PQRSTA0

■ Overview

Sensor for detecting the room temperature.

- It can help to detect the exact room temperature at the optimal position.
- Model applied to Cassette,Duct type
- Parts
  - Remote temperature sensor assembly
  - Cable 15m

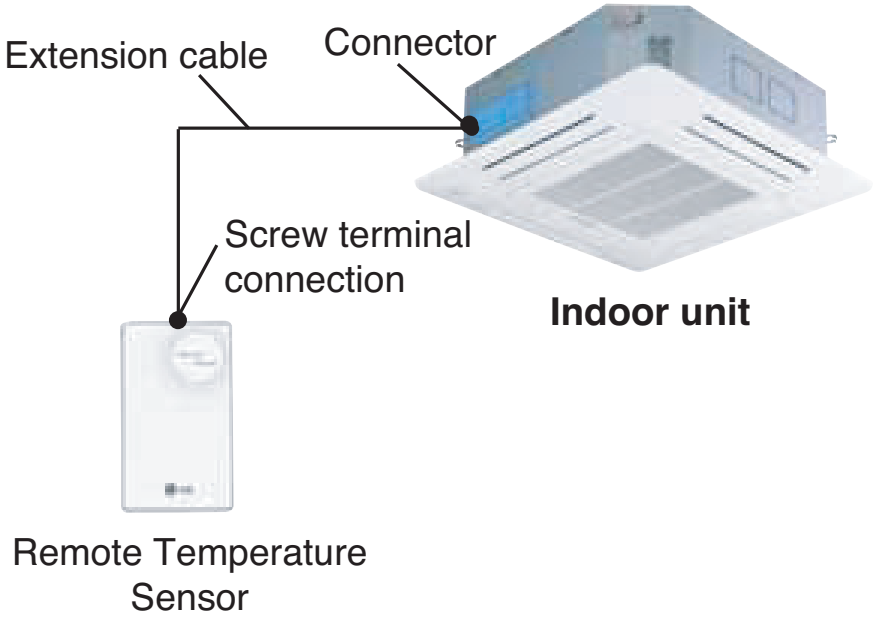

4.2 Remote Temperature Sensor

■ Installation

Step 1

Insert the connector of the connection wire into the space for the connector in place of the room temperature sensor.

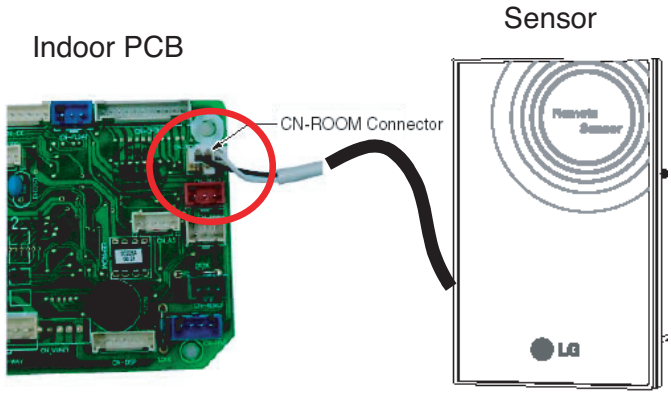

Wiring diagram of back side of Remote sensor

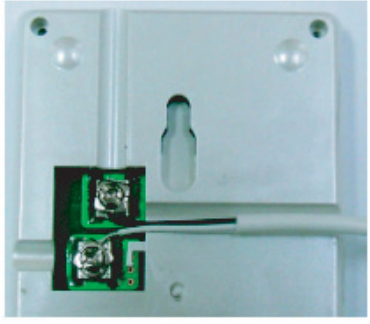

The Connection wire does not mater if you change the color of the wie because of non-polar.

Step 2

In the case of wired remote controller installed, set the

Temperature sensing mode at MAIN mode.

(* Note : Refer each wired remote controller's installation manual
How to change and set room temperature sensing mode)

4.2 Remote Temperature Sensor

Step 3

Intergrate the remote temperature sensor with the screws as the order of arrows.

Fixing the remote controller

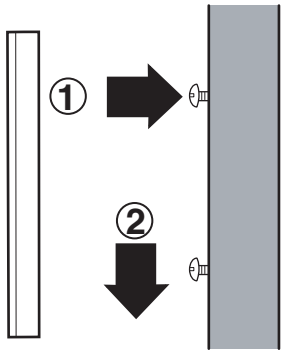

CAUTION

1. Choose the place where the average temperature can be measured for the place the indoor unit operates.
2. Avold direct sunlight
3. Choose the place where the cooling/heating devices do not affect the remote sensor.
4. Choose the place where the outlet of the cooling fan do not affect the remote sensor.
5. Choose the place where the remote sensor isn't affected when door is open.

4.3 Cool/Heat Selector

4.3.1 PRDSBM

■ Overview

- This switch enables selection of heating, cooling or fan mode.
  So it can prevent that cooling & heating mixing error occurs during the change of season.
- To use the cool/heat selector function you should set dip switch of outdoor main PCB Refer outdoor PDB

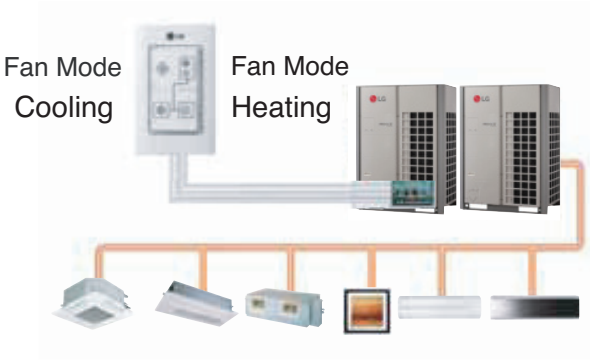

- Indoor unit control without central controller
- Select operation mode : Cooling, Heating, Fan mode
- Mode lock for cooling & heating mixing error-proof during the change of season.

■ Installation

- Connect trminals (①, ②, GND) on the back side of Cool/Heat Selector to terminals (①, ②, GND) of Outdoor Main PCB.

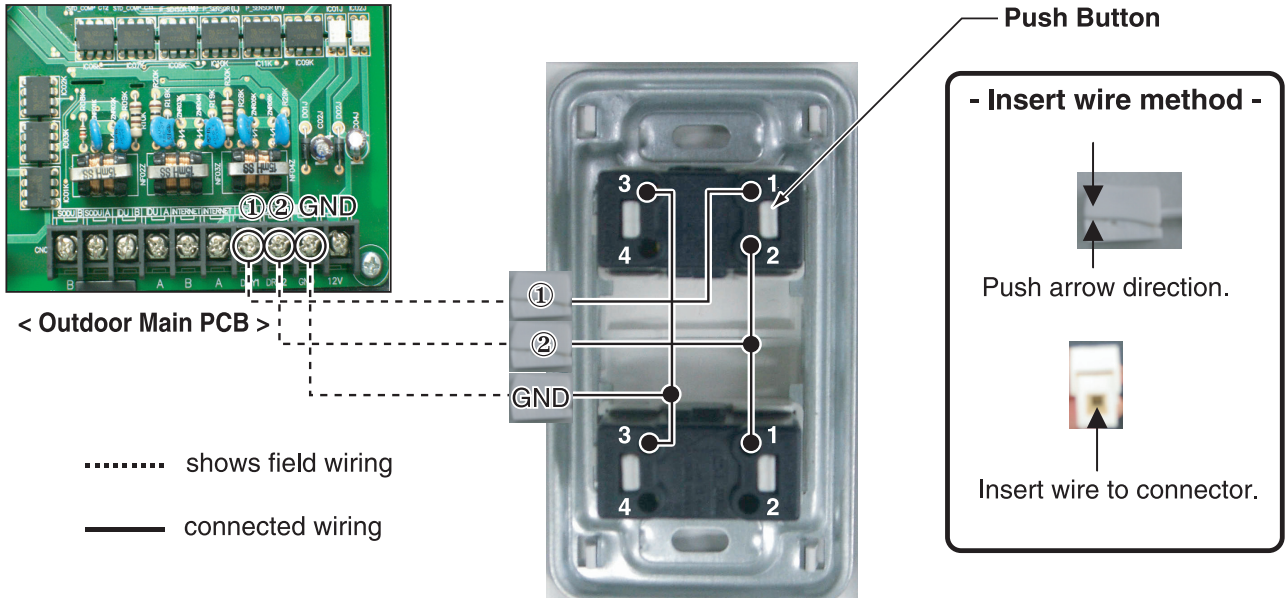

<Outdoor Dry Contact Back Side >

❊ Communication line length can be maximum 300m, use communication line as thick as 1.25mm².

- In case of Multi V III series , You can use all off function instead of Fan mode more details are refer each Multi V III product's installation Manual

4.4 IO(Input/Output) Module

4.4.1 PVDSMN000

IO module is communication interface device for connection between Multi V outdoor unit and external devices.

*** Note : This Module is available after Multi V 4 series. For detail information, refer to the PDB of outdoor unit.**

- Functions

• INPUT

Enable / Disable Low Noise Operation (Only for MULTI V)

- This function enable or disable low noise operation according to contact input signal to the IO Module. When it's enabled, outdoor unit reduces fan speed depends on outdoor unit setting. For more information for setting outdoor unit, please refer to installation manual of outdoor unit.

Demand Control

- This function is to reduce outdoor unit power consumption by using input signal. This manual provides variable setting for demand control according to input method. This function supports 2 types of input signal : AI(0~10V) and contact signal(3 Step).

• OUTPUT

Output Outdoor or Indoor Unit Status Signal

- This function displays outdoor or indoor unit's operation status. Depends on dip switch setting, either outdoor or indoor unit operation status is reflected through output signal.

Output Error Status

- This function displays error signal by digital output when either outside or indoor unit has an error.

■ Specifications

• Features

IO module

• Accessory

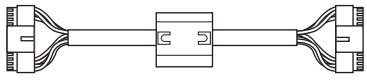

Cable

Screw 4EA

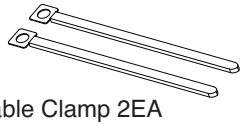

Cable Clamp 2EA

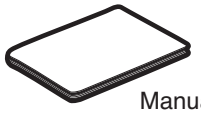

Manual

Bracket

• Name of each part

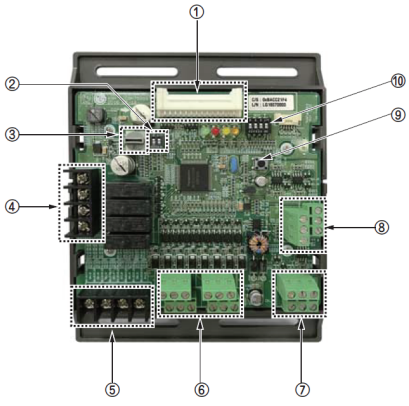

① **Main connector :** Power input and communication connector with Outdoor unit
② **SW102 :** Switch for setting internal function
③ **SW104 :** Rotary Switch for setting Demand control step
④ **Digital Output :** Operating & Error status Relay output (250V, 1A)
⑤ **Digital Output :** Automatic ball valve(Shut off Refrigerant leakage) Relay output (250V, 1A)
⑥ **Digital Input :** Dry contact input
⑦ **Analog Input :** 0 - 10 V⎓ Analog signal input
⑧ **Analog Output :** 0 - 10 V⎓ Analog signal output
⑨ **SW103 :** Reset Switch
⑩ **SW101 :** Dip Switch for setting operating function

4.4 IO(Input/Output) Module

■ Installation

① Separate front panel from outdoor unit.
② Separate front cover of control box.
③ Assemble IO Module and bracket.
④ Fix the bracket on designated location with two clamp cords(105mm).
⑤ Connect the connection wires according to the instructions. (Please refer to Setting and Using Method)

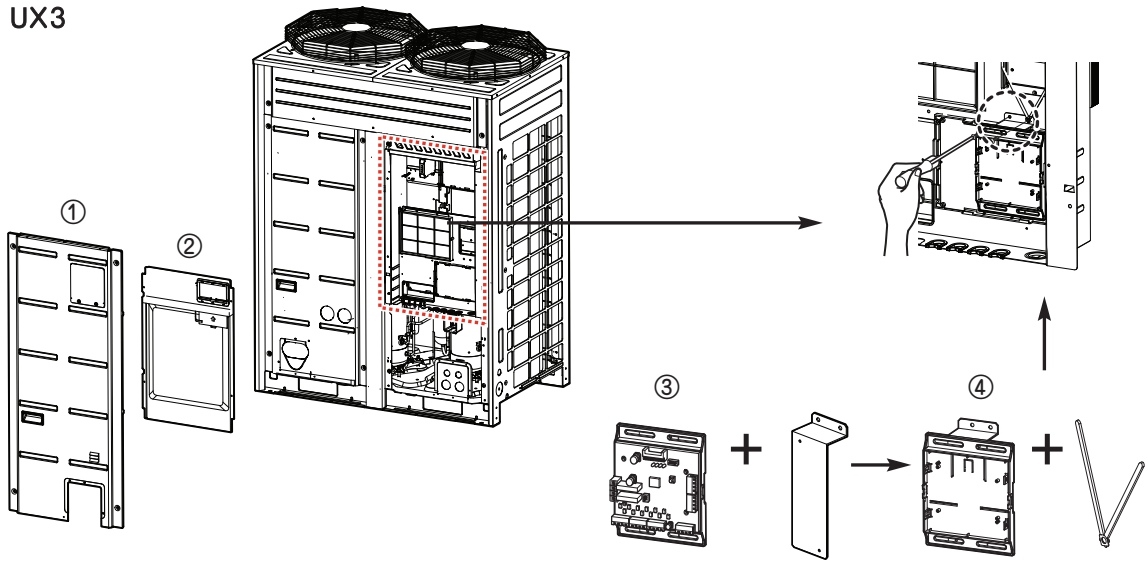

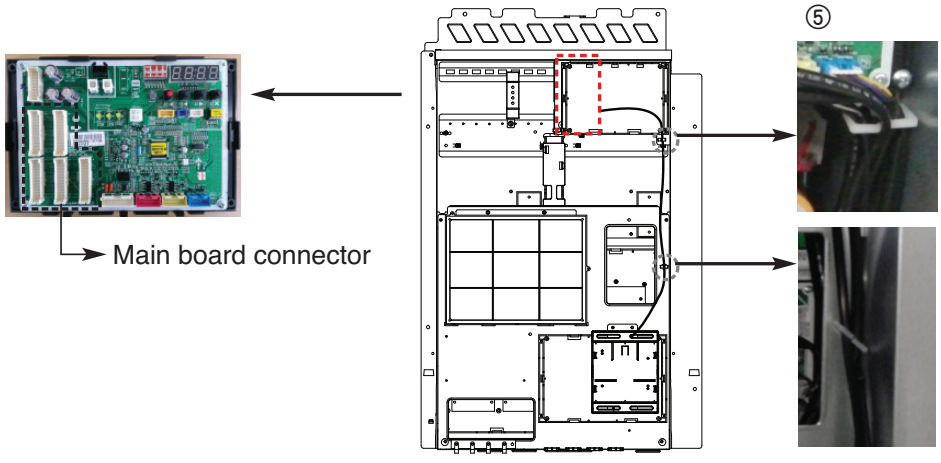

NOTE

IO Module is installed only master outdoor unit.

CAUTION

Be sure to turn off outdoor unit power before installation.

4.4 IO(Input/Output) Module

⑥ Fix and fasten components and cables.
⑦ Perform the switch setting according to the instructions.

Using 105mm clamp cords, fasten the core as below.

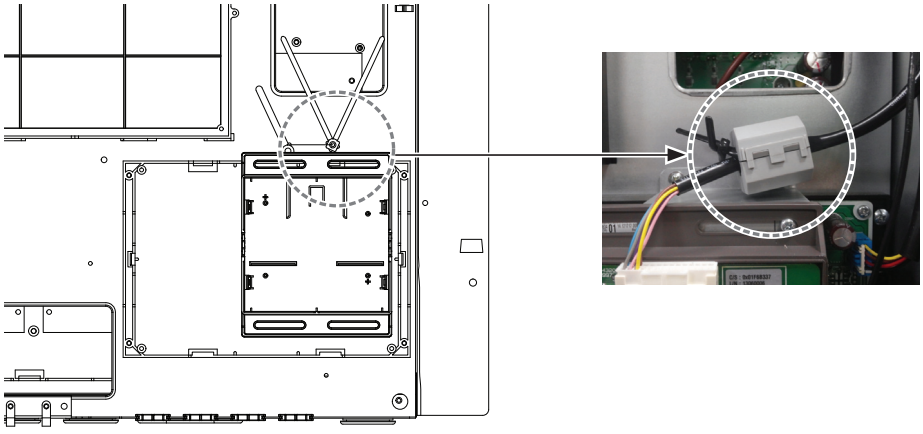

Using 65mm clamp cords, fasten the relay output cable as below.

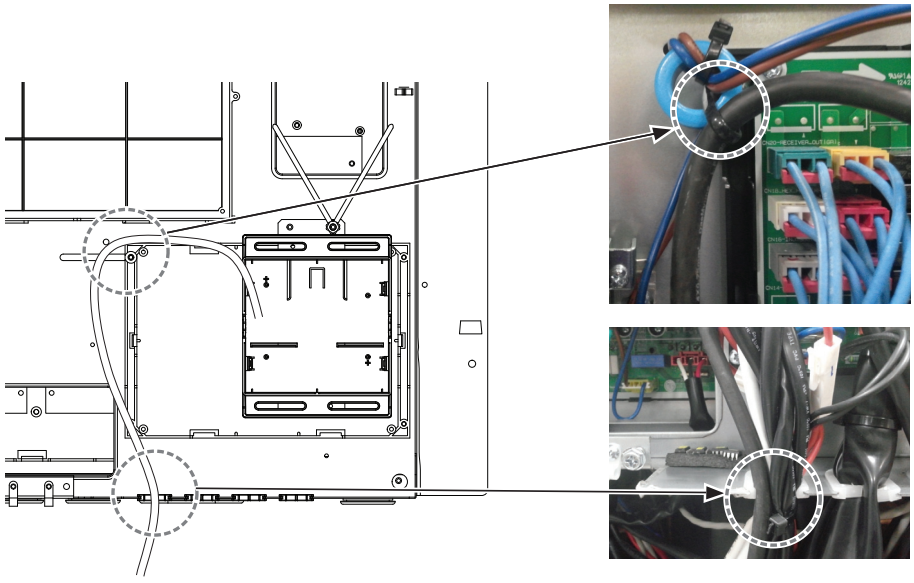

4.4 IO(Input/Output) Module

■ Power source input

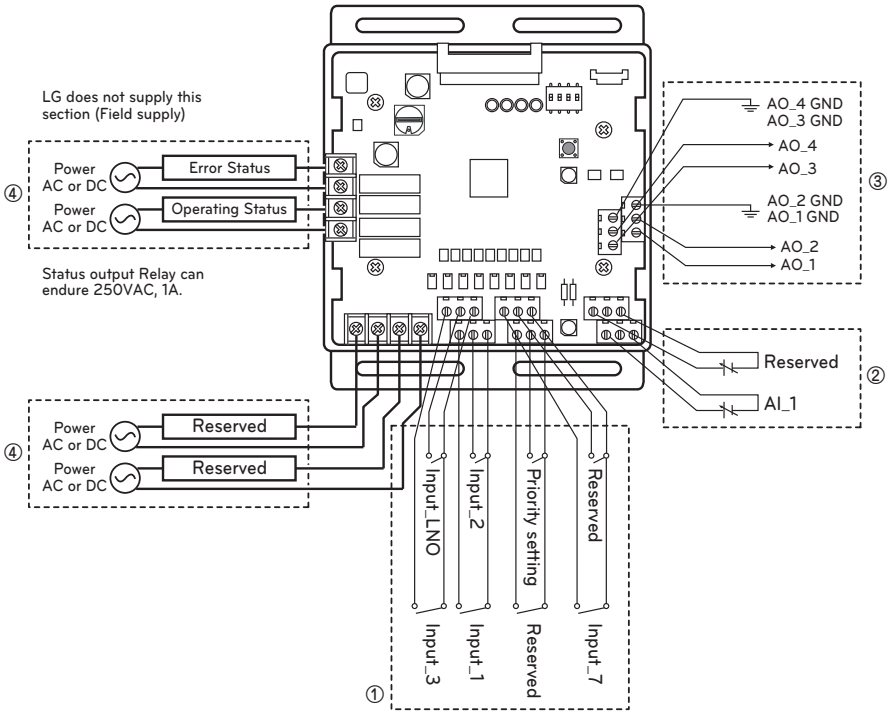

AI : Analog Input (0 - 10 V⎓)
AO : Analog Output (0 - 10 V⎓, Max 20 mA)
Input_LNO : Low Noise Operation

① Dry contact input part
Connect Non Voltage contact signal for demand control (3 step)
* Priority setting
Using 'Priority setting' contact signal, set the priority of command.
(External command from DDC Vs Command from LG central controller.)
- Close : Central controller has priority to external signal.
- Open : External signal has priority to central controller.

② Analog input part
Connect Analog input signal for demand control (10 step)

③ Analog output part
Connect Analog output signal for controlling third party devices.
Ex) Valve actuator for variable water flow. Damper actuator for Low Ambient Kit

④ Digital output part
Connect status display devices.

⚠ CAUTION

Power must be turned on after the product is wired completely.

4.4 IO(Input/Output) Module

■ Set Up

• Select the option of control functions(1)

Using 'SW101', select the option of control function as described below.

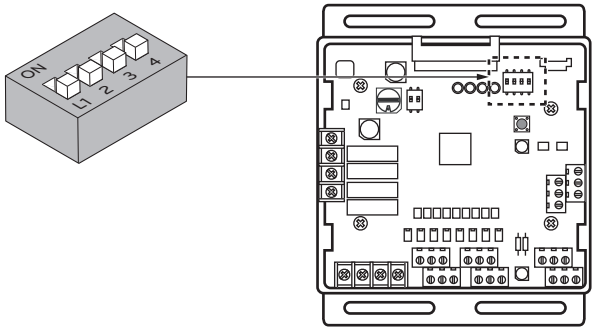

NOTE

Default status is all off

▶ L3 : Set Low Noise Operation
This is a function driving outdoor unit fan RPM to operate low speed for reducing fan noise according to the input signal. To use this function, you should set Outdoor unit mode, Please refer to PDB more detail.

Position	Function
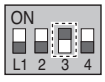	ON : Enable Low Noise Operation OFF : Disable Low Noise Operation

CAUTION

If the Dip SW is set , IO module System is operating preferentially than outdoor unit setting.

▶ L4 : Set Operating status output

Position	Function
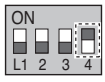	ON : Activate Digital Output according to Indoor Unit status OFF : Activate Digital Output according to Outdoor Unit status

CAUTION

After change Dip SW setting, press reset switch to reflect the setting.

4.4 IO(Input/Output) Module

• **Select the option of control functions(2)**

Using 'SW102', set the internal function as described below.

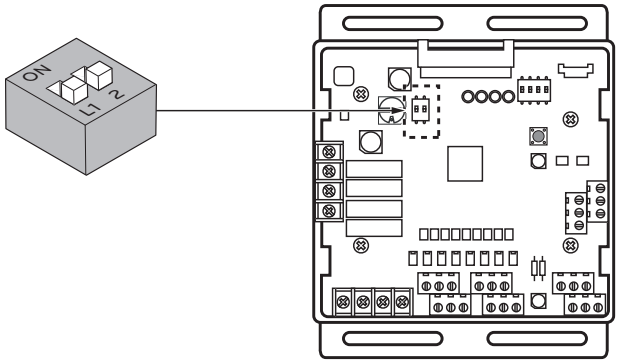

NOTE

Default status is all off

▶ L1 : Set Analog output default value when Communication Error will be occur (Module – ODU)

Position	Function
	ON : Analog output 0V OFF : Analog output 10V

▶ L2 : Set Analog output Range
Basically this module keeps a minimum Analog output voltage refer to L1,L2 setting of SW101 to prevent unexpected accident. When you need to use 0~10V full range, L2 should be set as ON.

Position	Function
	ON : Ignore minimum Analog output value setting (L1,L2 setting value of 4pin Dip SW) OFF : Follow minimum Analog output value setting (L1,L2 setting value of 4pin Dip SW)

CAUTION

After change Dip SW setting, press reset switch to reflect the setting.

4.4 IO(Input/Output) Module

• **Set the control step for demand control**

Use the Rotary Switch to set a control step for contact signal input : The type of input signal and control step can be set using 'SW104'

This function is for demand control to reduce power consumption.

Set the control mode what you want according to the table as below.

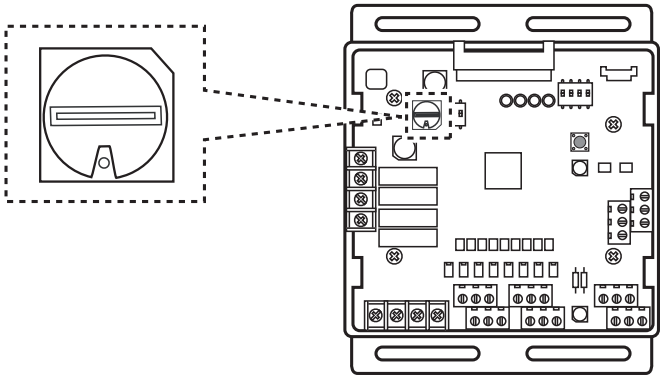

- Type of input signal

SW_STEP	Input signal
0, 1, 2, 3, 4, 5, 6, 7	Contact signal input
C, D, E	Analog input signal

⚠ CAUTION

Do not change a command too quickly.
Keep the command 30 seconds at least, otherwise it will cause a damage to outdoor unit.

- Operation rate condition :
  - Cooling : Outdoor 35 °C, Indoor 27 °C
  - Heating : Outdoor 7 °C, Indoor 20 °C
- The tolerance of the operation rate can be cause by combination of outdoor unit, operating condition, installation circumstance.
- When operation rate is 100%, Target Evaporating Temp. and Target Condensing Temp. can be changed by installation option. (Refer to product data book)
- Input_1 : 0 ´E OFF, Input_1 : 1 ´E ON

4.4 IO(Input/Output) Module

- Detail of the control step for digital input signal

SW_ STEP	Input_1	Input_2	Input_3	Cooling		Heating		Type of input
				Evaporating Temp. [°C]	Operation rate	Condensing Temp. [°C]	Operation rate	
0	0	0	0	No control	-	No control	-	Contact signal
	1	0	0	5.9	70%	40.4	70%	
	0	1	0	11.0	40%	31.3	40%	
	0	0	1	Comp off	0%	Comp off	0%	
1	0	0	0	No control	-	No control	-	
	1	0	0	5.9	70%	40.4	70%	
	0	1	0	9.0	50%	34.5	50%	
	0	0	1	Comp off	0%	Comp off	0%	
2	0	0	0	No control	-	No control	-	
	1	0	0	5.0	80%	43.1	80%	
	0	1	0	9.0	50%	34.5	50%	
	0	0	1	Comp off	0%	Comp off	0%	
3	0	0	0	No control	-	No control	-	Contact signal
	1	0	0	5.9	70%	40.4	70%	
	0	1	0	11.0	40%	31.3	40%	
	0	0	1	All off	0%	All off	0%	
4	0	0	0	No control	-	No control	-	
	1	0	0	5.9	70%	40.4	70%	
	0	1	0	9.0	50%	34.5	50%	
	0	0	1	All off	0%	All off	0%	
5	0	0	0	No control	-	No control	-	
	1	0	0	5.0	80%	43.1	80%	
	0	1	0	9.0	50%	34.5	50%	
	0	0	1	All off	0%	All off	0%	
6	0	0	0	No control	-	No control	-	
	1	0	0	9.0	50%	34.5	50%	
	0	1	0	Comp off	0%	Comp off	0%	
	0	0	1	All off	0%	All off	0%	
7	0	0	0	No control	-	No control	-	
	1	0	0	Comp off	0%	Comp off	0%	
	0	1	0	9.0	50%	34.5	50%	
	0	0	1	5.5	75%	41.8	75%	

4.4 IO(Input/Output) Module

- Demand control by analog input control (10 Step)

SW_ STEP	Input Voltage	Cooling		Heating		Type of input
		Evaporating Temp. [°C]	Operation rate	Condensing Temp. [°C]	Operation rate	
C	0	Comp off	0%	Comp off	0%	Analog input
	1	Comp off		Comp off		
	2	Comp off		Comp off		
	3	11.0	40%	31.3	40%	
	4	9.8	45%	33.3	45%	
	5	9.0	50%	34.5	50%	
	6	7.2	60%	37.5	60%	
	7	5.9	70%	40.4	70%	
	8	5.0	80%	43.1	80%	
	9	4.1	90%	45.6	90%	
	10	3.1	100%	48.1	100%	
D	0	No control	-	No control	-	Analog input
	1	3.1	100%	48.1	100%	
	2	4.1	90%	45.6	90%	
	3	5.0	80%	43.1	80%	
	4	5.9	70%	40.4	70%	
	5	7.2	60%	37.5	60%	
	6	9.0	50%	34.5	50%	
	7	9.8	45%	33.3	45%	
	8	11.0	40%	31.3	40%	
	9	Comp off	0%	Comp off	0%	
	10	All off	0%	All off	0%	
E	0	Comp off	0%	Comp off	0%	Analog input
	1	11.0	40%	31.3	40%	
	2	9.8	45%	33.3	45%	
	3	9.0	50%	34.5	50%	
	4	7.2	60%	37.5	60%	
	5	5.9	70%	40.4	70%	
	6	5.0	80%	43.1	80%	
	7	4.1	90%	45.6	90%	
	8	3.1	100%	48.1	100%	
	9	3.1		48.1		
	10	3.1		48.1		

4.4 IO(Input/Output) Module

■ Using functions

• **Demand control**
Using Demand control function with 3-Non Voltage contact.

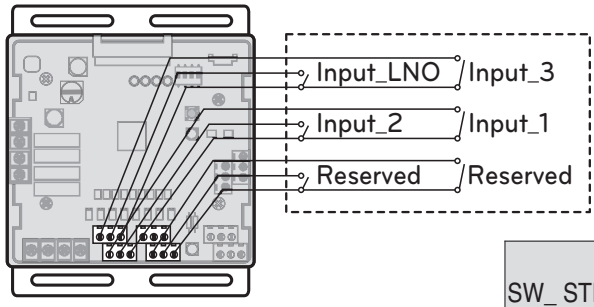

With this function comp capacity of outdoor unit can be controlled.

Ex) Demand control by 3-contact signal

LG does not supply this section (Field supply)

SW_ STEP	Input_1	Input_2	Input_3	Comp capacity Of outdoor unit(%)	Type of input
0	0	0	0	No control	Contact signal
	1	0	0	70	
	0	1	0	40	
	0	0	1	Comp off	

CAUTION

- This input can accept only non voltage contact.
  Do not input external power source. Otherwise it will cause a serious damage.
- If the contact point is attached, capacity control is applied preferentially by TMS system.
- If the NLO contact point is attached, System is operated preferentially than outdoor unit setting.

Using Demand control function with 0 - 10 V⎓

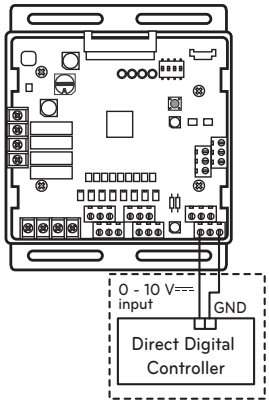

With this function comp capacity of outdoor unit can be controlled by BMS.

Ex) Demand control by Analog input signal
Refer to Detail of the control step for analog input signal.

LG does not supply this section (Field supply)

CAUTION

- This function is very sensitive to voltage level.
  So when using analog input, make a signal cable as short as possible.
- Do not change a command too quickly.
  Keep the command 30 seconds at least, otherwise it will cause a damage to outdoor unit.

4.4 IO(Input/Output) Module

• **Operation status**

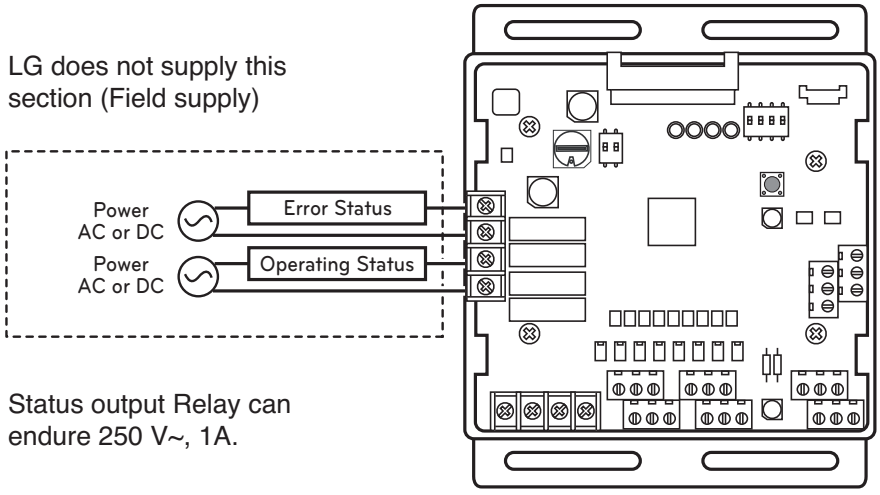

CAUTION

When using high voltage over than 24 V~, make sure to use H07RNF wire.

① Error Display : This Module display error signal as below
- Level 1,2 error of Outdoor Unit
- Indoor Unit error _ All IDU Error.

② Operating Display : This function is depend on 4th Dip SW setting of 'SW101'.
- L4 is ON : Display Indoor Unit operating status (Include FAN mode only)
- L4 is OFF : Display Outdoor Unit operating status (Compressor operating condition)

• L4 : Set Operating status output

Position	Function
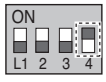	ON : Activate Digital Output according to Indoor Unit status OFF : Activate Digital Output according to Outdoor Unit status

4.5 Variable Water Flow Valve Control Kit

4.5.1 PWFCKN000

This can be applied to save pump operation power by optimizing water flow rate by interlocking between electric valve and MULTI V WATER IV operation. Depends on MULTI V WATER IV operation cycle, IO module outputs analog signal (0~10V) to electric valve. Please keep water flow rate more than 40% of the rated water flow.

- Applied model : MULTI V™ WATER IV

- Functions

- **Demand control**
  - This function is to reduce Outside Unit power consumption by using input signal. This manual provides variable setting to control outside unit capacity according to input method. This function supports 2 types of input signal : AI(0~10V) and contact signal(3 Step).
- **Output Outside or Indoor Unit Operation status**
  - This function displays outside or indoor unit's operation status. Depends on DIP switch setting, either outside or indoor unit operation status is reflected through output signal.
- **Output Outside or Indoor Unit Error Status Signal**
  - This function displays error signal by digital output when either outside or indoor unit has an error.

■ Specifications

- **Features**

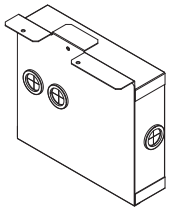

Controller Assy
(Variable Water Flow Control Board, Transformer, Terminal Block)

- **Accessory**

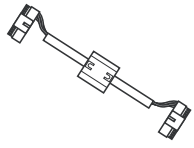

Cable 1EA

Screw 2EA

Cable Clamp 1EA

Manual

❋ Variable Water Flow Control board is same with IO module board.
For basic control functions which are operated by IO module, refer to "2.7 IO(Input/Output) module".

4.5 Variable Water Flow Valve Control Kit

■ Installation

① Separate front panel from Outside Unit
② Separate front cover of control box.
③ Separate Oil_Level Harness(3Pin Yellow) in External PCB(CN28).
④ Sepatate VWFC* Cover in VWFC* Assy.
⑤ Connect the black cable to the VWFC* PCB(CN101).
⑥ Install the VWFC* Assy to the C/Box by using screws.

* VWFC : Variable Water Flow Control kit

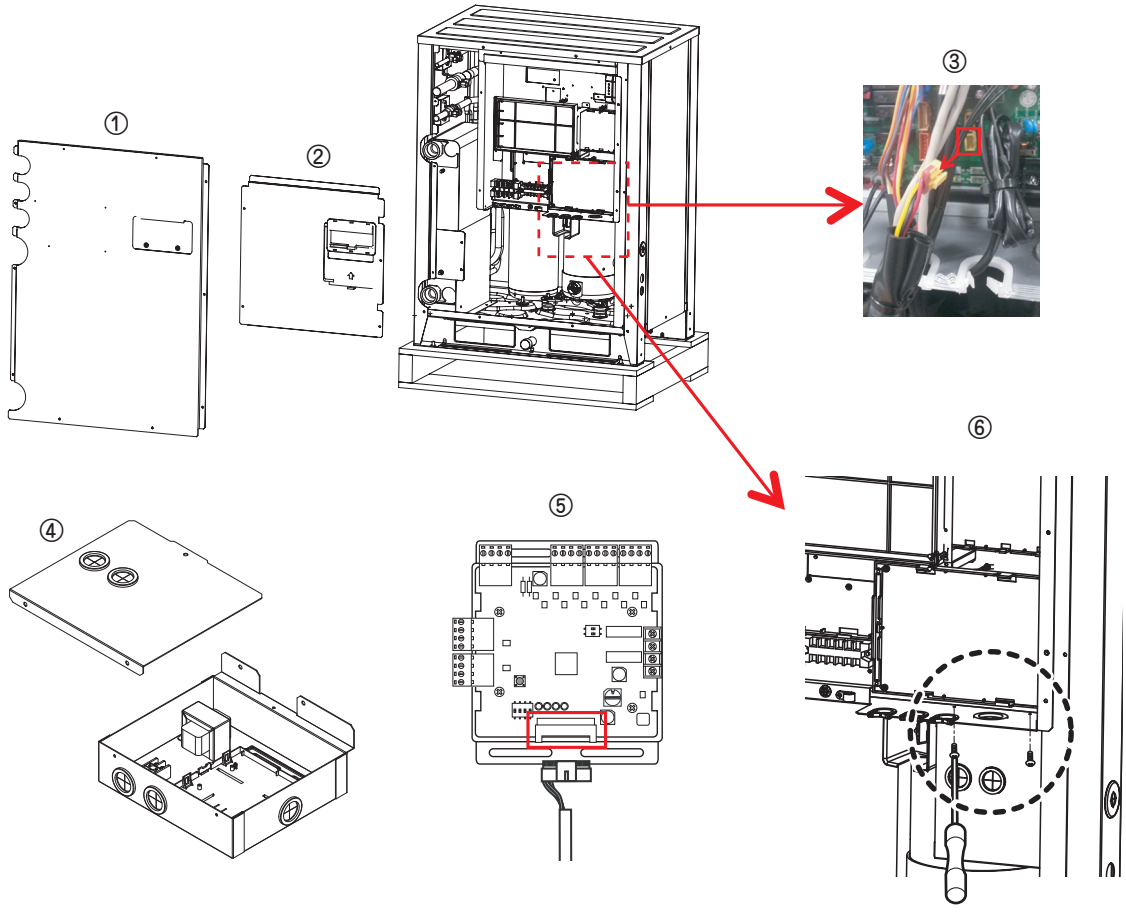

CAUTION

Be sure to turn off Outside Unit power before installation.

4.5 Variable Water Flow Valve Control Kit

⑦ Connect a power cable (24 V~) of water flow control valve to the terminal block (2Pin Terminal block, Max current 0.42A).
⑧ Connect a signal cable (0 - 10 V⎓) of water flow control valve to CN1_A0(A0_1(A+), GND(A-)) of VWFC.
⑨ Set up the main function DIP Switch of VWFC PCB.
⑩ Pull out put cable on Cover Bush.
⑪ Install the VWFC Cover by using screws.

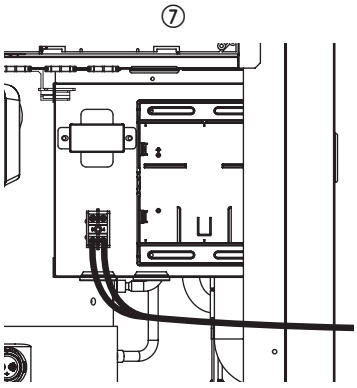

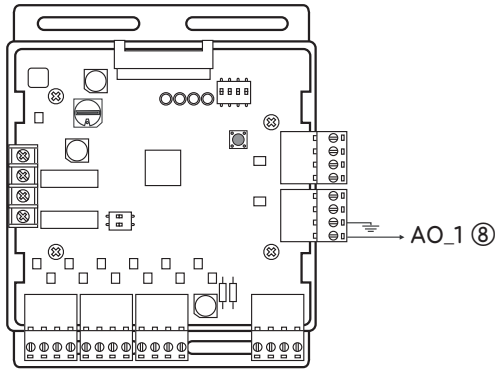

⑫ Connect the blue cable of transformer to the Main PCB(CN_JIG_N,CN_JIG_L).
⑬ Connect the black cable of VWFC PCB to the Main PCB(CN10).
⑭ Connect the Oil_Level harness(3Pin Yellow) to the External PCB(CN28).
⑮ Fix and fasten components and cables.
⑯ Turn on the main power line of Outside unit.
⑰ Check the signal of water flow control valve to CN1_A0(A0_1, GND) of VWFC and the water flow rate.

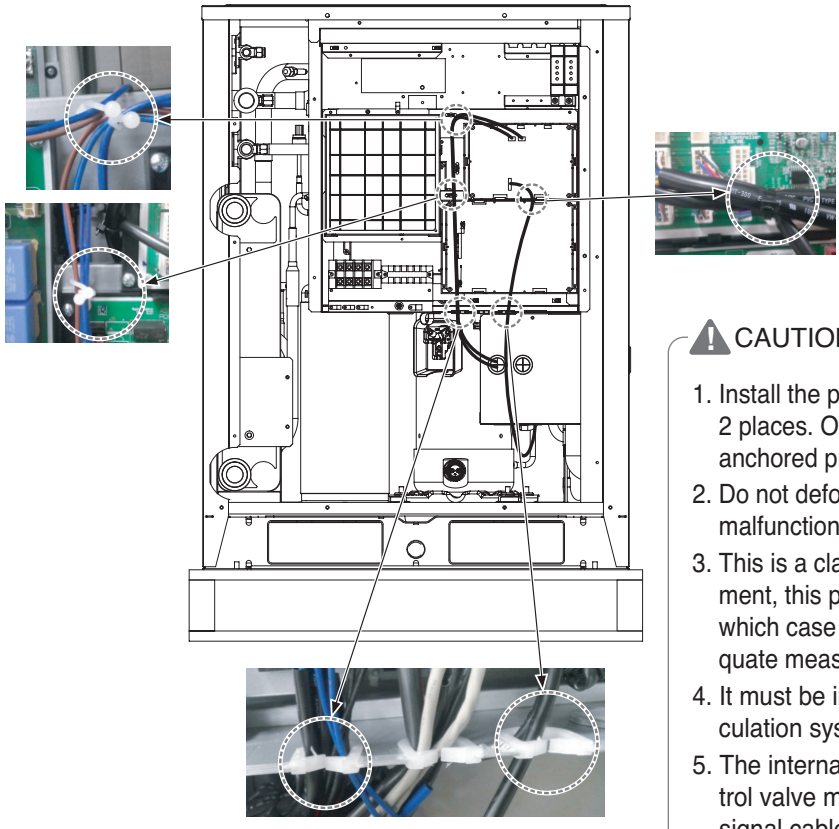

⚠ CAUTION

1. Install the product on flat surface and screw at least 2 places. Otherwise the VWFC PCB may not be anchored properly.
2. Do not deform the case at random. It may cause malfunction of the Variable Water Flow Control PCB
3. This is a class A product. In a non-industrial environment, this product may cause radio interference, in which case the user may be required to take adequate measures.
4. It must be installed variable flow valve on water circulation system in advance.
5. The internal resistance of variable water flow control valve must be above 100kΩ. The resistance of signal cable(CN1_A0) must be below 10Ω.

4.5 Variable Water Flow Valve Control Kit

■ Wiring

• Power source input

For connecting of power source input, refer to “2.7 I/O(Input/Output) module” part.

• Wiring (Single Unit)

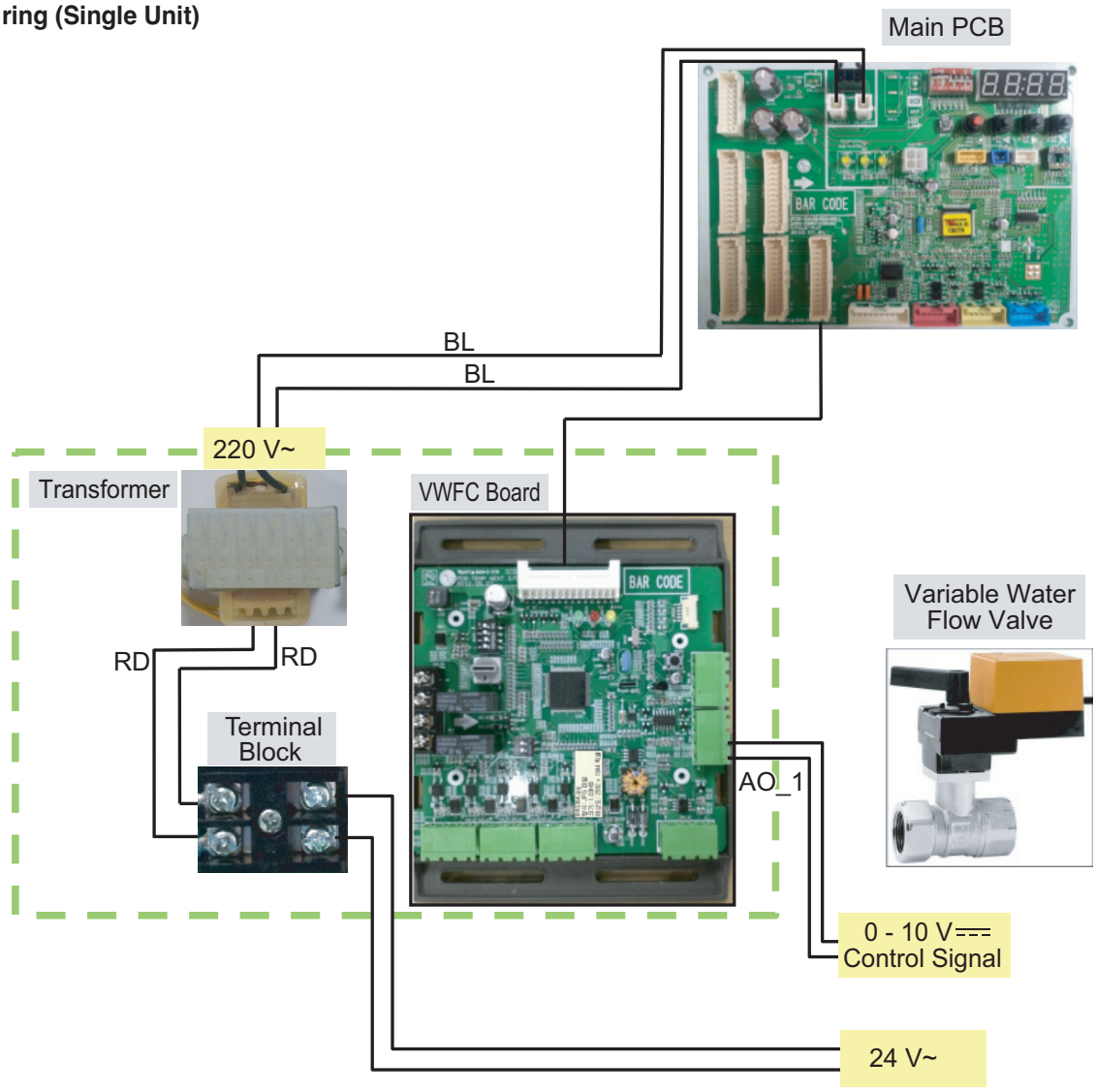

❊ BL : Blue, BR : Brown, RD : Red, BK : Black, WH : White, GR : Green

NOTE

Transformer can supply only 24 V~ to the terminal block
Do not input external power into Main PCB. Otherwise it will cause a serious damage.
The Variable Water Control Kit controls only 1 valve actuator.
The power (24 V~) and signal(0 - 10 V⎓) line is recommended by AWG22(1/32 in, (0.644 mm), 0.016 Ω/ft (0.053 Ω/m)).

4.5 Variable Water Flow Valve Control Kit

• Wiring (Series Unit)

Please apply an individual PWFCKN000 model for each MULTI V WATER IV unit.

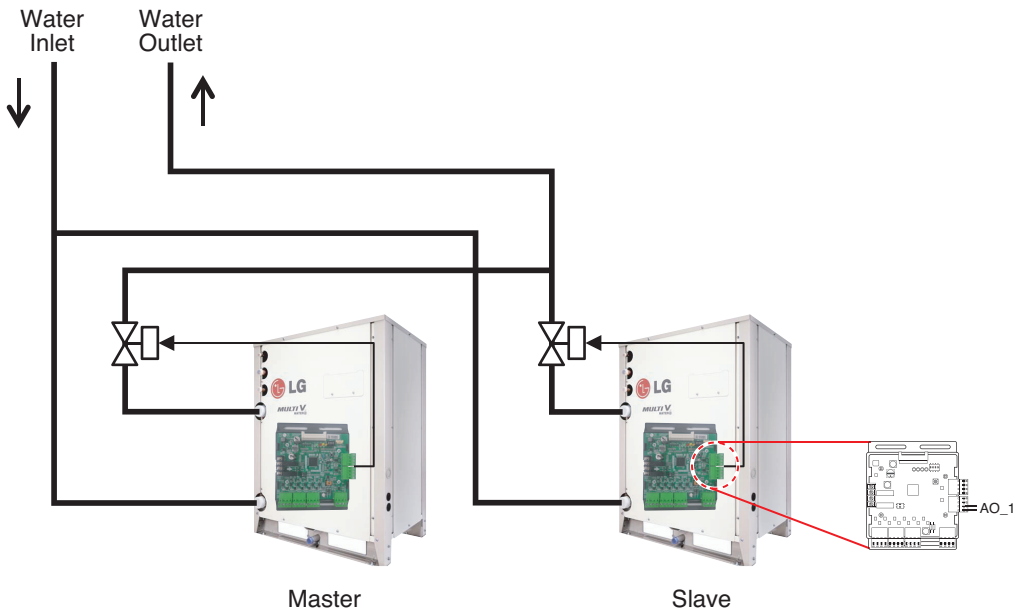

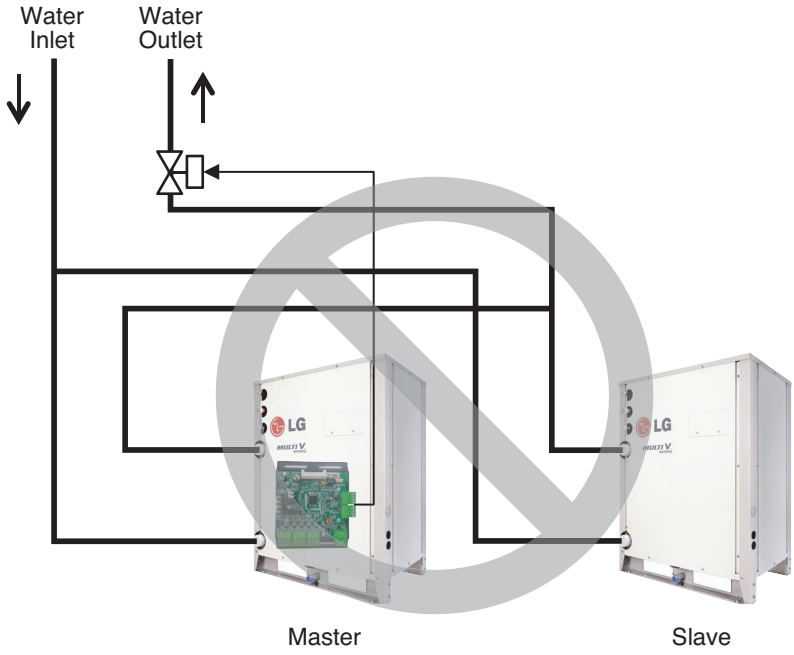

CAUTION

Variable Water Control Kit only can control 1 unit of MULTI V WATER IV and electric valve.

4.5 Variable Water Flow Valve Control Kit

■ Set Up

• Select the option of control functions(1)

Using 'SW102', Select the option of control function as described below.
- Set analog output for communication error.

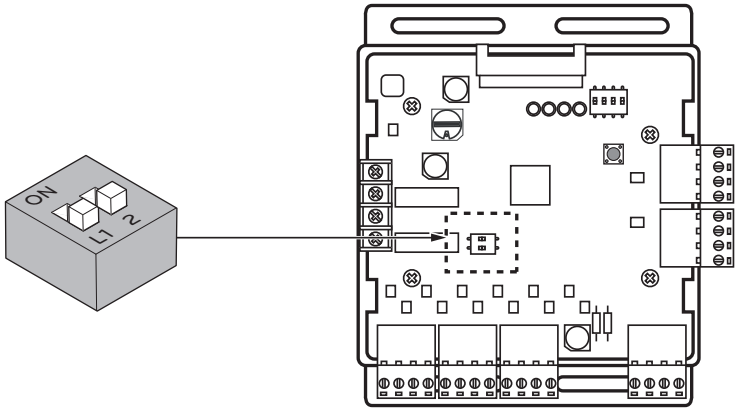

NOTE

Default status is all off

▶ L1 : Set Analog output default value when Communication Error will be occur (Module – ODU)

Position	Function	Wiring
	ON : Analog output 0V OFF : Analog output 10V	AO_1 ~ 4

▶ L2 : Set Analog output Range
Basically this module keeps a minimum Analog output voltage refer to L1,L2 setting of SW101 to prevent unexpected accident. When you need to use 0~10V full range, L2 should be set as ON.

Position	Function
	ON : Ignore minimum Analog output value setting (L1,L2 setting value of 4pin DIP SW) OFF : Follow minimum Analog output value setting (L1,L2 setting value of 4pin DIP SW)

CAUTION

After change Dip SW setting, press reset switch to reflect the setting.

4.5 Variable Water Flow Valve Control Kit

• Select the option of control functions(2)

Using 'SW101', select the option of control function as described below.

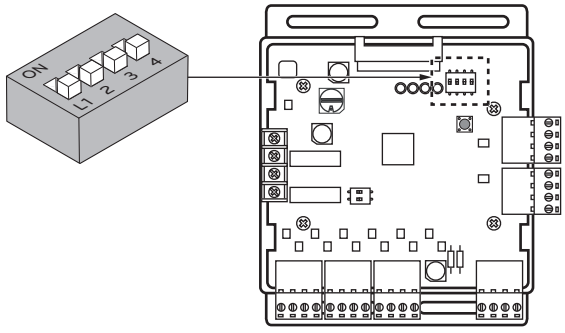

▶ Output signal setting

Position	Function
ON L1 2 3 4	Control signal : 0 V⎓ (OFF), 8 - 10 V⎓ (ON)
ON L1 2 3 4	Control signal : 0 V⎓ (OFF), 6 - 10 V⎓ (ON)

Position	Function
ON L1 2 3 4	Control signal : 0 V⎓ (OFF), 4 - 10 V⎓ (ON) Default status
ON L1 2 3 4	Control signal : 0 V⎓ (OFF), 2 - 10 V⎓ (ON)

⚠ CAUTION

If the DIP SW is set , VWCK(Board) has a higher Priority than outside unit setting.

▶ Operation status output : SW101 L4

Position	Function	Wiring
ON L1 2 3 4	ON : Activate Digital Output according to Indoor Unit status OFF : Activate Digital Output according to Outside Unit status	Operation status

Depends on SW101 L4 position(ON/OFF), VWCK(Board) is operated as below

Dip Switch	Operation
SW101 L4 ON	One of indoor is turned on(include fan mode) → Relay on All Indoor are turned off → Relay off
SW101 L4 OFF	One of the compressor is turned on → Relay on All compressor are turned off → Relay off

⚠ CAUTION

After change 'DIP Switch' setting, then you must press reset switch to reflect the setting.
Before operating the Outside unit, check the flow rate of water and voltage signal of PCB.
Minimum flow rate of water is recommended 40% of rated flow rate. Otherwise, the Outside unit get damage.

4.5 Variable Water Flow Valve Control Kit

• Setting the Variable Water Flow control function of Outside Unit

Varlable Water Flow Control kit mode Setting method

Master unit PCB DIP switch on : No.5

↓

Select the mode using '▶', '◀' Button :
"Func" Push the '●' (Confirm) button

↓

Select the Function using '▶', '◀' Button :
"Fn4" Push the '●' (Confirm) button

↓

Select the Function using '▶', '◀' Button :
"On" Push the '●' (Confirm) button

↓

Variable Water flow Control Kit mode is set

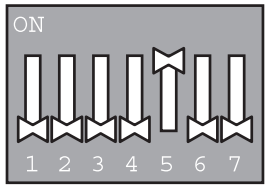

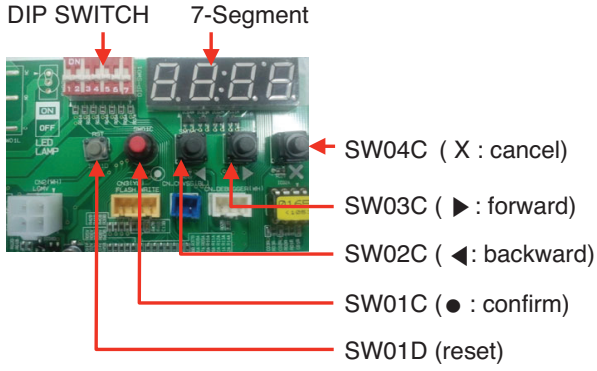

❊ If you want to stop the Variable Water flow Control Kit Mode, refer to the following.
▷ DIP Switch No.5 On -> "Func" -> "Fn4" -> "Off"

⚠ CAUTION

After change 'DIP Switch' setting, then you must press reset switch to reflect the setting.
Before operating the Outside unit, check the flow rate of water and voltage signal of PCB.
Minimum flow rate of water is recommended 40% of rated flow rate. Otherwise, the Outside unit get damage.

4.6 Low Ambient Control Kit

4.6.1 PRVC2

This Kit expands the operation range of Multi V product to the lower ambient condition at cooling mode. For Low Ambient operation,
Snow Hood and Air Damper also should be installed. Refer to the installation manual of Kit.

■ Specifications

• Features

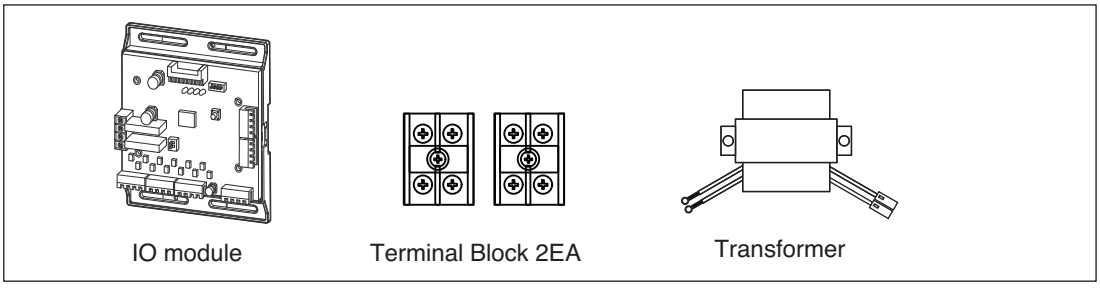

• Accessory

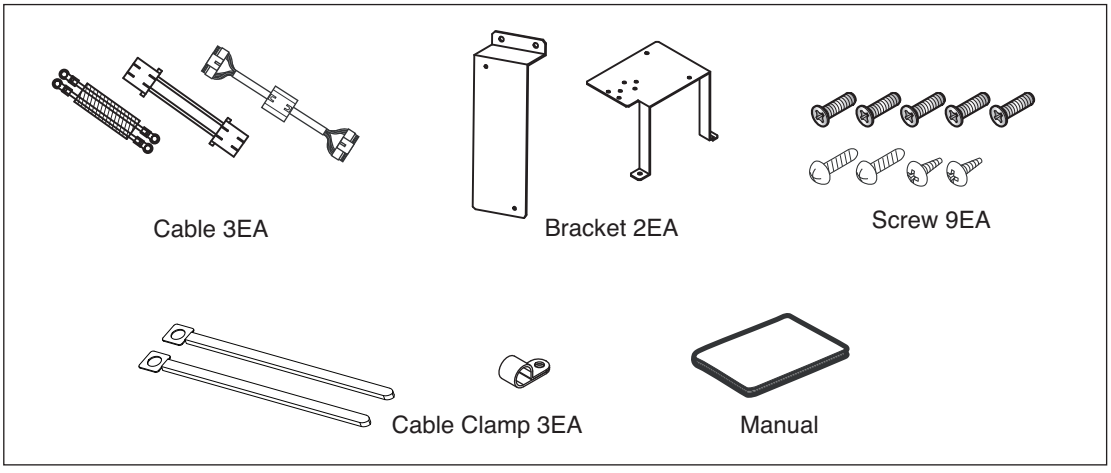

4.6 Low Ambient Control Kit

■ Installation

• Installation of IO module

For installation method of IO module, refer to the IO module part.

• Installation of Transformer, Terminal Block

① Shut off the main power of outdoor unit.
② Install the IO Module in the C/Box by using screws.
③ Install the Bracket2 in the C/Box by using screws.
④ Install the transformer on the Bracket2 by using screws.
⑤ Install the terminal block on the Bracket2 by using screws.
⑥ Connect the Main PCB(CN10) to IO Module(CN101) by using the cable assembly.
⑦ Connect the blue cable of transformer to the Main PCB(JIG_N), brown cable of transformer to the Main PCB(JIG_L).
⑧ Connect the red cable of transformer to the terminal block (2Pin Yellow terminal block).
⑨ Connect a power cable(12 V⎓) to CN101(12V,GND) of IO Module.
⑩ Connect the black cable of Damper Actuator to the terminal block and connect the cable of IO Module(CN1_A0(GND(A-)) to the black cable of Damper Actuator.
⑪ Connect the red cable of Damper Actuator to CN1_A0(A0_1(A+)) of IO Module.
⑫ Set up the main function Dip S/W of IO Module.
(SW101 : L1,L2=On and L3,L4=Off / SW102 : L1,L2=Off)
⑬ Set up the Dip S/W of Main Outdoor unit PCB. (Refer to page 21 for details)
⑭ Turn on the main power of outdoor unit.
⑮ Check the signal to CN1_A0(AO_01,GND) of IO Module and Air Damper.

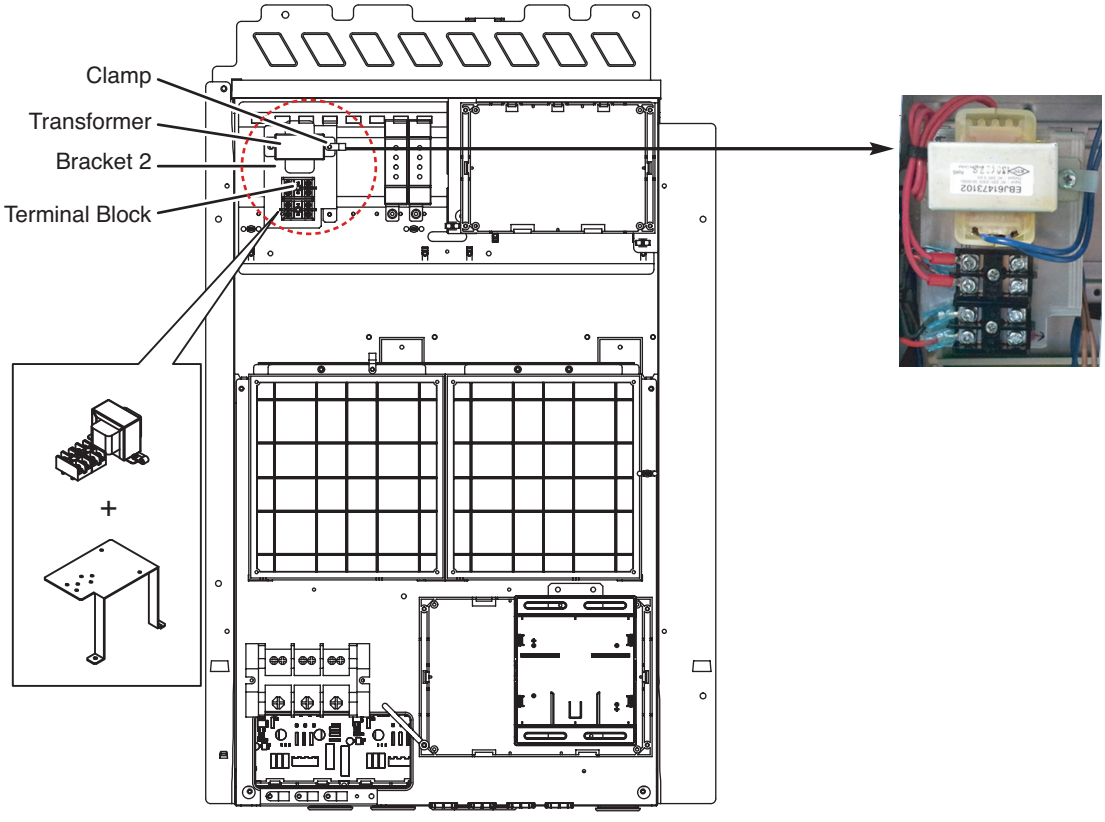

4.6 Low Ambient Control Kit

Using the Clamp and Tie, fasten the Damper Actuator output cable and Trans output cable as below.

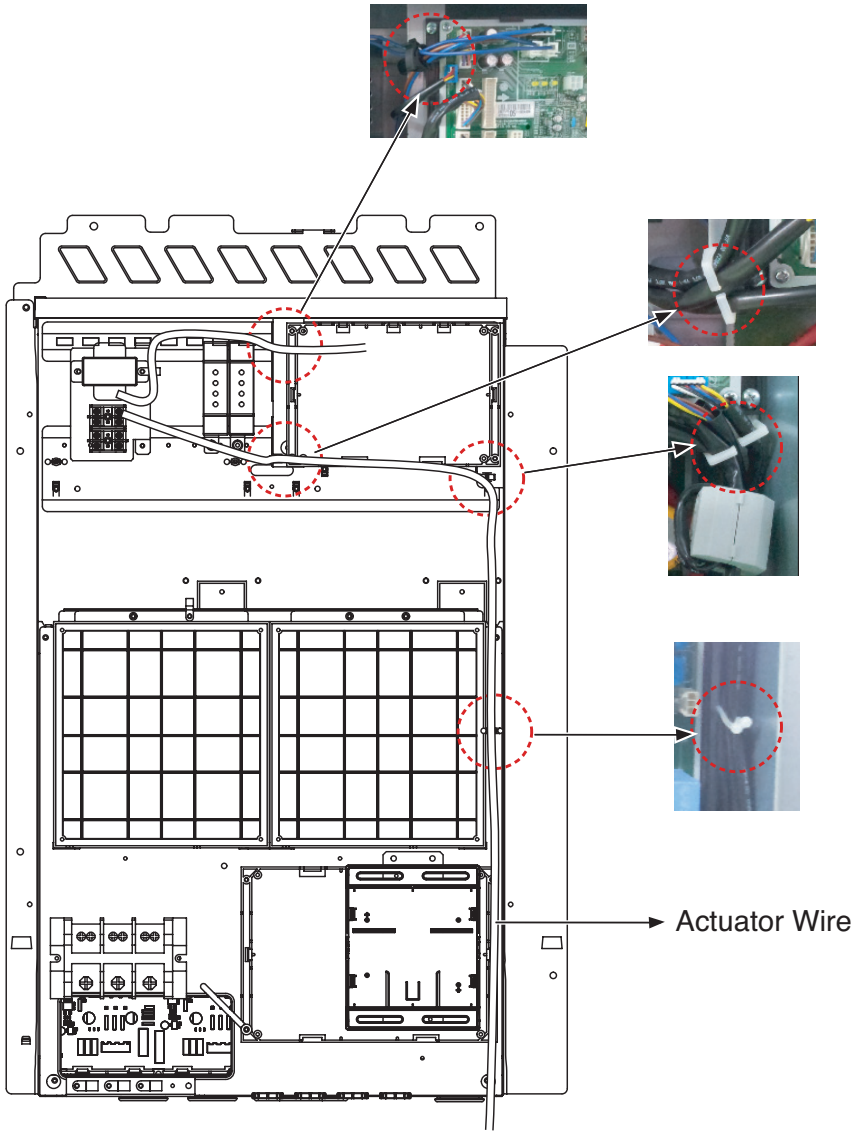

4.6 Low Ambient Control Kit

■ Wiring

• Power source input

For connecting of power source input, refer to the IO module part.

• Wiring for Damper Actuator (In case of 3 Unit)

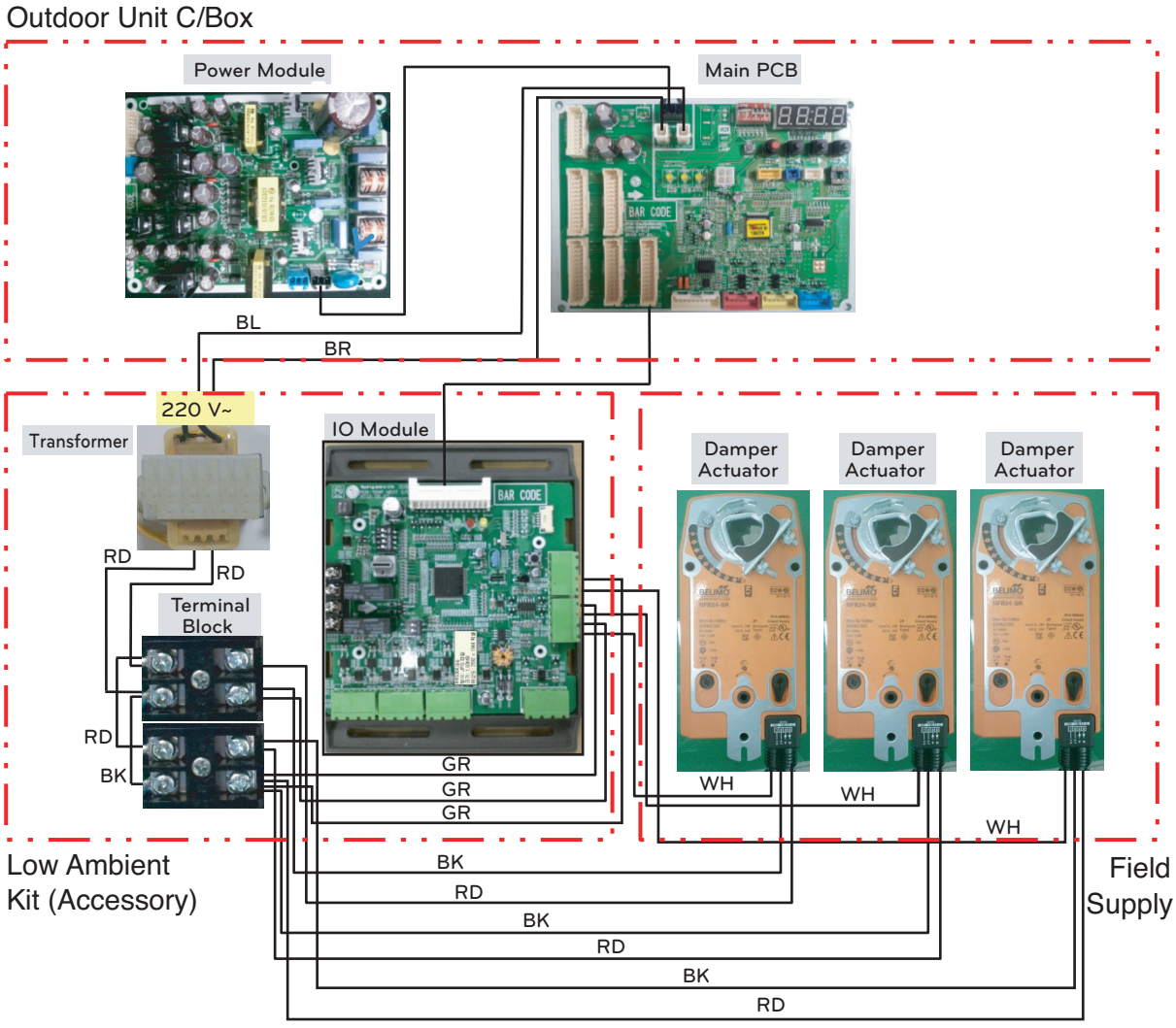

※ BL : Blue, BR : Brown _ 220 V~
RD : Red, BK : Black, GR : Green _ AC/DC 24V
WH : White _ 0 - 10 V⎓ Control Signal

NOTE

Damper Actuator can accept only 24 V⎓ power input.
Do not input AC power. Otherwise it will cause a serious damage.
The IO Module can control maximum three actuators.
Case of one valve, the slave signal connecter must not use.
The power (AC/DC 24V) and signal(0 - 10 V⎓) line is recommended by AWG22(1/32 in, (0.644 mm), 0.016 Ω/ft (0.053 Ω/m)).

4.6 Low Ambient Control Kit

■ Set Up

• Setting the Low Ambient Function of IO module

Using 'SW101', 'SW102', You can use Low Ambient Kit Mode

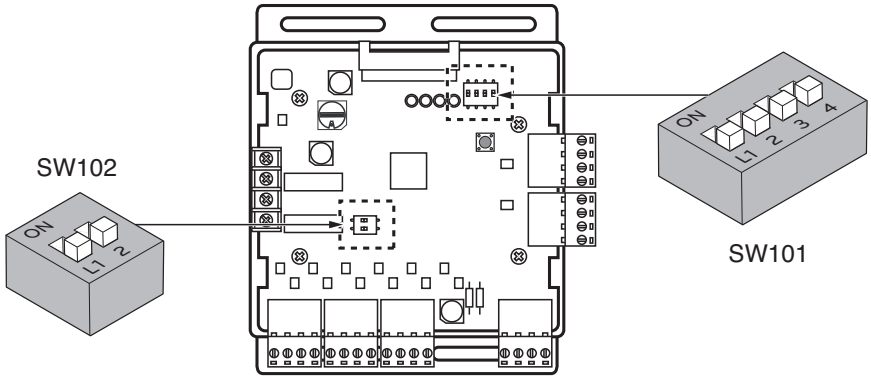

NOTE

Default status is all off.

Set Low Ambient Kit Operation

Position	Setting of Dip Switch
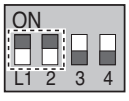	SW101 - L1=ON L2=ON L3=OFF L4=OFF
	SW102 - L1=OFF L2=OFF

CAUTION

- If the Dip SW is set, IO module System is operating preferentially than outdoor unit setting.
- After change Dip SW setting, press reset switch to reflect the setting.

4.6 Low Ambient Control Kit

• Setting the Low Ambient Function of Outdoor Unit

Low Ambient Kit mode Setting method

Master unit PCB DIP switch on : No.5

↓

Select the mode using '▶', '◀' Button : "Func" Push the '●' (Confirm) button

↓

Select the Function using '▶', '◀' Button : "Fn10 or Fn11" Push the '●' (Confirm) button

↓

Select the Function using '▶', '◀' Button : "On" Push the '●' (Confirm) button

↓

Low Ambient Kit mode is set

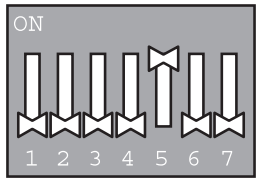

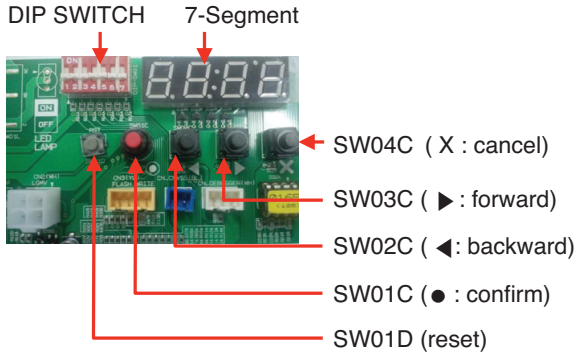

❊ If you want to stop the Low Ambient Kit mode, refer to the following.
▷ Dip Switch No.5 On -> "Func" -> "Fn10" -> "Off"

❊ Fn10 Model : Heat Recovery Model
Fn11 Model : Heat Pump Model

LG
Life's Good

P/No.: MFL61741641

LG Electronics

Air Conditioner
20 Yeouido-dong, Yeongdeungpo-gu,
Yeouido P.O.Box 335 Seoul,
150-721, Korea.
http://partner.lge.com

Printed in Korea December / 2017

The air conditioners manufactured by LG have received ISO9001 certificate for quality assurance and ISO14001 certificate for environmental management system.
The specifications, designs, and information in this brochure are subject to change without notice.